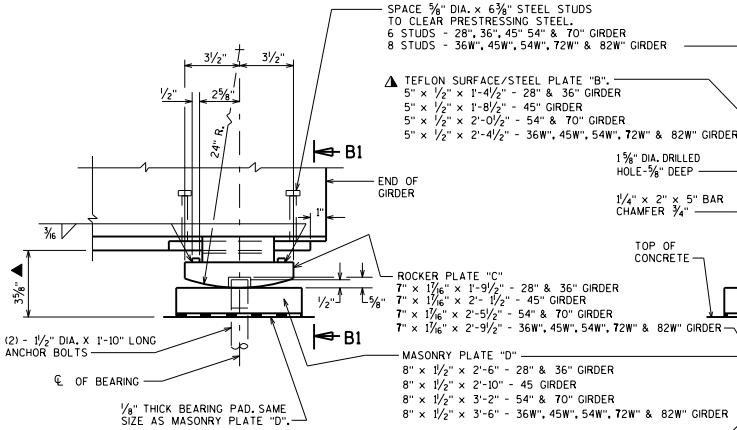

EXPANSION BEARING ASSEMBLY

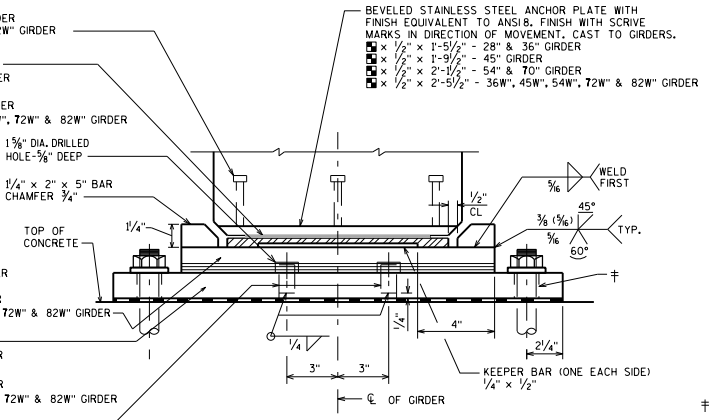

SECTION B1-B1

BEARING NOTES

ALL BEARINGS ARE SYMMETRICAL ABOUT ℄ OF GIRDER AND ℄ OF BEARING.

ALL MATERIAL IN BEARINGS, BUT EXCLUDING STAINLESS STEEL PLATE, TEFLON SURFACE, PINTLES, ANCHOR BOLTS, NUTS AND WASHERS SHALL CONFORM TO ASTM A709 GRADE 50W.

STAINLESS STEEL PLATE SHALL CONFORM TO ASTM A240, TYPE 304.

STEEL PINTLES SHALL CONFORM TO ASTM A449 OR ASTM A572 GRADE 50.

ANCHOR BOLTS, NUTS AND WASHERS SHALL CONFORM TO ASTM F1554 GRADE 55, OR MATERIAL OF EQUIVALENT YIELD STRENGTH AND ELONGATION.

ALL STRUCTURAL STEEL BEARING PLATES SHALL BE FLAT ROLLED STEEL PLATES WITH ALL SURFACES SMOOTH AND FREE FROM WARP AND ALL EDGES SMOOTH, STRAIGHT, AND VERTICAL.

ALL PLATE CUTS SHALL BE MACHINE OR MACHINE FLAME CUTS.

ALL FINISHED SURFACES SHALL BE MACHINE FINISHED BY AN AUTOMATIC PROCESS.

ANCHOR BOLTS SHALL BE THREADED 3". PROVIDE ONE STANDARD WROUGHT WASHER AND ONE HEX NUT PER BOLT. PROJECT ANCHOR BOLTS, MASONRY PLATE "D" THICKNESS + 2 1/4", ABOVE TOP OF CONCRETE.

CHAMFER ANCHOR BOLTS PRIOR TO THREADING.

MASONRY PLATE "D", ROCKER PLATE "C", ANCHOR BOLTS, NUTS AND WASHERS SHALL BE GALVANIZED IN ACCORDANCE WITH ASTM A153, CLASS "C". STEEL PLATE "B" SHALL BE SHOP PAINTED. DO NOT PAINT TEFLON SURFACE.

ALL MATERIAL IN "STEEL BEARINGS FOR PRESTRESSED CONCRETE GIRDERS", INCLUDING BEARING PADS, SHALL BE PAID FOR AT THE UNIT PRICE BID FOR "BEARING ASSEMBLIES EXPANSION 8-__-" , EACH.

‡ DRILLED HOLES FOR ANCHOR BOLTS IN MASONRY PLATE "D" SHALL HAVE A DIAMETER 3/8" LARGER THAN ANCHOR BOLT.

▲ TEFLON SURFACE, USE UNFILLED WITH MINIMUM 1/16" THICKNESS. PLACE WITH SCRIVE MARKS IN DIRECTION OF MOVEMENT. BOND STEEL PLATE "B" AND TEFLON WITH ADHESIVE MATERIAL MEETING THE REQUIREMENTS FOUND IN THE STANDARD SPECIFICATION.

◪ PROVIDE A METHOD FOR HANDLING ROCKER PLATE "C" DURING GALVANIZING.

AT INSTALLATION, ENSURE STAINLESS STEEL SLIDING FACE OF THE UPPER ELEMENT AND THE TFE SLIDING FACE OF THE LOWER ELEMENT HAVE THE SURFACE FINISH SPECIFIED AND ARE CLEAN AND FREE OF ALL DUST, MOISTURE, AND ANY OTHER FOREIGN MATTER.

DESIGNER NOTES

IF ALL BEARINGS AT A GIVEN SUBSTRUCTURE UNIT ARE FIXED, UTILIZE 1/2" THICK ELASTOMERIC BEARING PADS AND FULL-DEPTH CONCRETE DIAPHRAGMS.

FOR EXPANSION BEARINGS, USE LAMINATED ELASTOMERIC BEARINGS WHENEVER POSSIBLE.

SEE STANDARD 27.02 AND 19.31 FOR CLEARANCE REQUIREMENTS AND STANDARD 27.02 FOR THE USE OF BEVELED ROCKER PLATE "C" ON GRADES GREATER THAN 3%.

HEIGHT OF BEARING SHOWN IN "EXPANSION BEARING ASSEMBLY" INCLUDES 1/8" BEARING PAD AND 1/16" TEFLON SURFACE.

▲ ADJUST HEIGHT IF BEVELED ROCKER PLATE "C" IS USED.

◪ ANCHOR PLATE LENGTH TO BE DESIGNED. MINIMUM LENGTH IS 10". SEE STD. 27.10 FOR ADDITIONAL GUIDANCE.

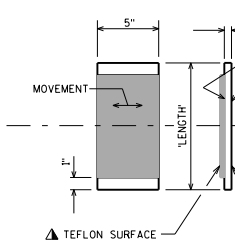

TEFLON SURFACE
ON PLATE "B"

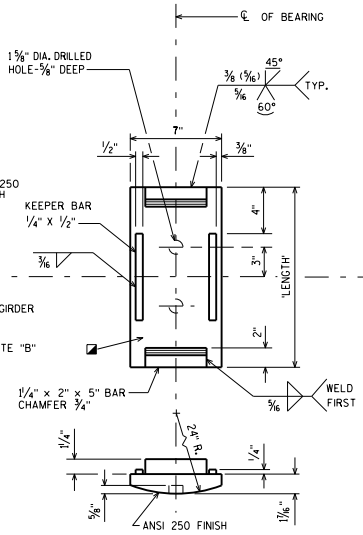

ROCKER PLATE "C"

EXPANSION BEARING

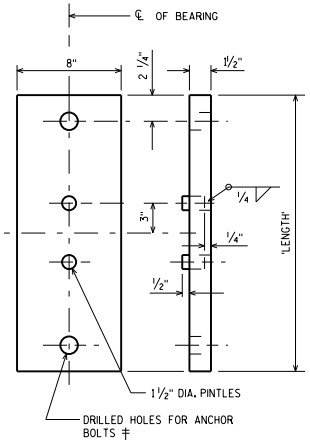

MASONRY PLATE "D"

CALCULATE THE REACTIONS AT THE BEARINGS DUE TO "TOTAL LOADS" AND ALSO "DEAD LOADS" ONLY. USE THE AASHTO LRFD SERVICE I LOAD COMBINATION AND CHECK TO SEE IF THE REACTIONS EXCEED THE BEARING CAPACITES IN THE TABLE BELOW. CONSIDER ONLY DEAD LOAD (DC + DW) AND HL-93 LIVE LOADS (LL), INCLUDING A 33% DYNAMIC LOAD ALLOWANCE (IM).

IF EITHER REACTION EXCEEDS ITS CORRESPONDING BEARING CAPACITY, THE BEARING DETAILS AS SHOWN ON THIS STANDARD MUST BE MODIFIED TO INCREASE THE BEARING CAPACITY. IF BEARING DETAILS ARE CHANGED AND ANY PLATE HAS A THICKNESS GREATER THAN 2", THEN PROVIDE AN ANSI 250 FINISH TO TOP AND BOTTOM SURFACE OF THESE PLATES.

	GIRDER SIZE	28" & 36"	45"	54" & 70"	36W", 45W", 54W", 72W" & 82W"
BEARING CAPACITY (KIPS)	TOTAL LOAD (DC+DW+(LL+IM))	180	230	280	330
	DEAD LOAD (DC + DW)	110	140	170	200

STEEL BEARINGS
FOR PRESTRESSED
CONCRETE GIRDERS

BUREAU OF STRUCTURES

APPROVED: Laura Shadewald

DATE: 7-23