EAU

PROJECT ID: 7361-00-70

WITH: N/A

COUNTY: BUFFALO

NOVEMBER 2021

ORDER OF SHEETS

TOTAL SHEETS = 70

STATE OF WISCONSIN
DEPARTMENT OF TRANSPORTATION

PLAN OF PROPOSED IMPROVEMENT

FOUNTAIN CITY - N. JCT. STH 95

EAGLE CREEK BRIDGE B-06-194

CTH G

BUFFALO COUNTY

STATE PROJECT	FEDERAL PROJECT	
	PROJECT	CONTRACT
7361-00-70		

STATE PROJECT NUMBER

7361-00-70

35

N

DESIGN DESIGNATION

A.A.D.T.	(2022)	=	350
A.A.D.T.	(2042)	=	520
D.H.V.	(2042)	=	47
D.D.		=	60/40
T.		=	10% (ASSUMED)
DESIGN SPEED		=	30 M.P.H.
ESALS		=	158,775

CONVENTIONAL SYMBOLS

PLAN: CORPORATE LIMITS; PROPERTY LINE; LOT LINE; LIMITED HIGHWAY EASEMENT; EXISTING RIGHT OF WAY; PROPOSED OR NEW R/W LINE; SLOPE INTERCEPT; REFERENCE LINE (300 FEET); EXISTING CULVERT; PROPOSED CULVERT (Box or Pipe); COMBUSTIBLE FLUIDS (CAUTION); MARSH AREA; WOODED OR SHRUB AREA

PROFILE: GRADE LINE; ORIGINAL GROUND; MARSH OR ROCK PROFILE (To be noted as such) (ROCK); SPECIAL DITCH (LABEL); GRADE ELEVATION (95.36); CULVERT (Profile View)

UTILITIES: ELECTRIC (E); FIBER OPTIC (FO); GAS (G); SANITARY SEWER (SAN); STORM SEWER (SS); TELEPHONE (T); WATER (W); UTILITY PEDESTAL; POWER POLE; TELEPHONE POLE

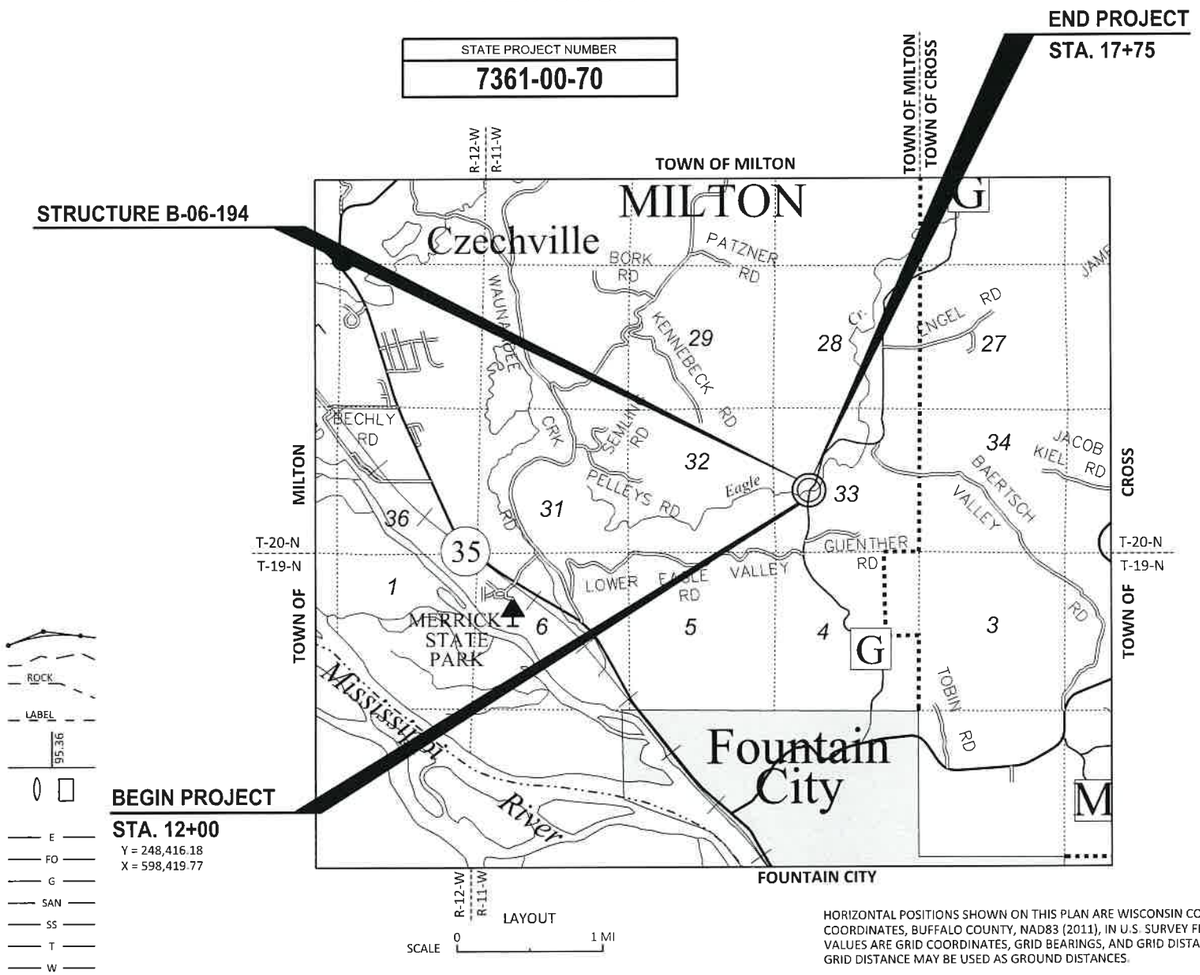

LAYOUT

SCALE 0 — 1 MI

TOTAL NET LENGTH OF CENTERLINE = 0.109

HORIZONTAL POSITIONS SHOWN ON THIS PLAN ARE WISCONSIN COUNTY COORDINATES, BUFFALO COUNTY, NAD83 (2011), IN U.S. SURVEY FEET. VALUES ARE GRID COORDINATES, GRID BEARINGS, AND GRID DISTANCES. GRID DISTANCE MAY BE USED AS GROUND DISTANCES.

ELEVATION SHOWN ON THIS PLAN ARE REFERENCE TO THE NORTH AMERICAN VERTICAL DATUM OF 1988, NAVD (2012).

ACCEPTED FOR

COUNTY of BUFFALO

7/14/21 (Date) (Highway Commissioner)

ORIGINAL PLANS PREPARED BY

JEWELL associates engineers, inc

Engineers - Architects - Surveyors

WISCONSIN ROBERT B. HANOLD E-45655 PRAIRIE DU SAC WI PROFESSIONAL ENGINEER 07/13/21

STATE OF WISCONSIN
DEPARTMENT OF TRANSPORTATION

PREPARED BY

Surveyor	JEWELL ASSOCIATES ENGINEERS
Designer	JEWELL ASSOCIATES ENGINEERS
Project Manager	MATTHEW THORNSEN, P.E.
Regional Examiner	TOU YANG, P.E.
Regional Supervisor	TYLER RONGSTAD, P.E.

APPROVED FOR THE DEPARTMENT

DATE: 7/26/2021 Matthew Thornsen P.E. Digitally signed by Matthew Thornsen P.E. Date: 2021.07.26 11:32:26-05'00' (Signature)

E

2

GENERAL NOTES

THE LOCATIONS OF EXISTING AND PROPOSED UTILITY INSTALLATIONS AS SHOWN ON THE PLAN ARE APPROXIMATE. THERE MAY BE OTHER UTILITY INSTALLATIONS WITHIN THE PROJECT AREA THAT ARE NOT SHOWN.

NO TREES OR SHRUBS ARE TO BE REMOVED UNLESS SUCH TREES OR SHRUBS HAVE FIRST BEEN INDICATED FOR REMOVAL BY THE ENGINEER IN THE FIELD.

EXCAVATION BELOW SUBGRADE (EBS) IS NOT USED TO BALANCE YARDAGE, AND IS NOT SHOWN ON THE CROSS SECTIONS BUT IS MEASURED AND PAID FOR AS COMMON EXCAVATION. EXACT LOCATIONS OF EBS WILL BE DETERMINED BY THE ENGINEER IN THE FIELD.

UNLESS SHOWN OTHERWISE, DISTURBED AREAS SHOWN WITHIN THE RIGHT-OF-WAY, EXCEPT THE AREAS WITHIN THE FINISHED SHOULDER POINTS ARE TO BE FERTILIZED (TYPE B), SEEDED (USE SEED MIX NO. 20), AND EROSION MATTED AS DIRECTED BY THE ENGINEER. ALL POST CONSTRUCTION WET AREAS SHALL BE SEEDED WITH SEEDING MIXTURE NO. 60. DO NOT FERTILIZE WETLAND AREAS.

WHEN THE QUANTITY OF THE ITEM OF BASE AGGREGATE DENSE OR ASPHALTIC SURFACE IS MEASURED FOR PAYMENT BY THE TON, THE DEPTH OR THICKNESS OF THE COURSE SHOWN ON THE PLANS IS APPROXIMATE, AND THE ACTUAL THICKNESS WILL DEPEND ON THE DISTRIBUTION OF MATERIAL AS DIRECTED BY THE ENGINEER IN THE FIELD.

SILT FENCE, TEMPORARY DITCH CHECKS, AND TURBIDITY BARRIER SHALL BE PLACED AS SHOWN ON THE PLAN OR AS DIRECTED BY THE ENGINEER IN THE FIELD. SILT FENCE AND TURBIDITY BARRIER SHALL BE PLACED PRIOR TO CONSTRUCTION AND SHALL BE IN PLACE PRIOR TO STRUCTURE REMOVAL.

EROSION MAT ALL MAINLINE SLOPES AS DIRECTED BY THE ENGINEER IN THE FIELD.

FILL EXPANSION IS VARIABLE AND IS ESTIMATED AT 25%.

REMOVAL OF ASPHALTIC SURFACES WHERE AN ABUTTING ASPHALTIC SURFACE IS TO REMAIN IN PLACE SHALL REQUIRE A SAWCUT MEETING THE APPROVAL OF THE ENGINEER IN THE FIELD.

THE LOCATION OF ALL PERMANENT SIGNING SHALL BE VERIFIED BY THE ENGINEER IN THE FIELD PRIOR TO PLACEMENT.

WETLANDS ARE PRESENT IN THE PROJECT LIMITS. THE CONTRACTOR SHALL NOT OPERATE EQUIPMENT OR STOCKPILE MATERIALS BEYOND THE EXISTING STREAMBANK FROM STA. 11+50 - 14+65, LT; STA. 14+80 - 15+25, LT; STA. 16+25 - 16+75, LT; STA. 13+00 - 14+80, RT; STA. 14+80 - 17+00, RT.

4-INCHES OF ASPHALTIC SURFACE SHALL BE CONSTRUCTED WITH A 1¾-INCH UPPER LAYER AND A 2¼-INCH LOWER LAYER.

ADJUST DITCH GRADING AS NECESSARY TO FIT FIELD CONDITIONS AND AS DIRECTED BY THE ENGINEER IN THE FIELD.

ASPHALTIC SURFACE QUANTITIES WERE CALCULATED USING 115 LB/SY/IN.

CURVE DATA IS BASED ON THE ARC DEFINITIONS.

CONTACTS

BUFFALO COUNTY HIGHWAY DEPARTMENT:

BOB PLATTETER, COMMISSIONER
S1672 STATE ROAD 37
ALMA, WI 54610
PH: (608) 685-6226
EMAIL: bob.platteter@co.buffalo.wi.us

DESIGN CONSULTANT:

JEWELL ASSOCIATES ENGINEERS, INC.
560 SUNRISE DRIVE
SPRING GREEN, WI 53588
ATTN: ROBERT HANOLD, P.E.
PHONE: (608) 588-7484
CELL: (608) 606-3568
EMAIL: robert.hanold@jewellassoc.com

WISCONSIN DEPT. OF TRANSPORTATION

WISDOT PROJECT MANAGER
718 W. CLAIREMONT AVENUE
EAU CLAIRE, WI 54701
ATTN: MATTHEW THORNSEN, P.E.
PH: (715) 225-4159
EMAIL: matthew.thornsen@dot.wi.gov

DNR LIAISON:

STATE OF WISCONSIN
DNR SERVICE CENTER
1300 W. CLAIRMONT
EAU CLAIRE, WI 54701
ATTN: AMY LESIK
PHONE: (715) 836-6571
EMAIL: amyl.lesik@wisconsin.gov

UTILITIES

ELECTRIC

RIVERLAND ENERGY COOPERATIVE
ATTN: ROB SOSALLA
P.O. BOX 277
ARCADIA, WI 54773
PHONE: (608) 863-0135
EMAIL: rsosalla@riverlandenergy.com

TELEPHONE

CENTURYLINK (LUMEN)
ATTN: TOM MURRAY
333 N. FRONT ST.
LA CROSSE, WI 54601
PHONE: (608) 615-4169
CELL: (608) 780-0895
EMAIL: tom.l.murray@centurylink.com

COCHRANE COOP TELEPHONE
ATTN: MATT BIESTERVELD
103 W. 5TH ST.
COCHRANE, WI 54622
PHONE: (608) 248-2323
EMAIL: mbiesterveld@cctcoop.com

DIGGERS HOTLINE
Dial 811 or (800) 242-8511
www.DiggersHotline.com

LIST OF STANDARD ABBREVIATIONS

ABUT	Abutment	INV	Invert	RDWY	Roadway
AC	Acre	IP	Iron Pipe or Pin	SALV	Salvaged
AGG	Aggregate	IRS	Iron Rod Set	SAN S	Sanitary Sewer
AH	Ahead	JT	Joint	SEC	Section
<	Angle	JCT	Junction	SHLDR	Shoulder
ASPH	Asphaltic	LHF	Left-Hand Forward	SHR	Shrinkage
AVG	Average	L	Length of Curve	SW	Sidewalk
ADT	Average Daily Traffic	LIN FT or LF	Linear Foot	S	South
BAD	Base Aggregate Dense	LC	Long Chord of Curve	SQ	Square
BK	Back	MH	Manhole	SF or SQ FT	Square Feet
BF	Back Face	MB	Mailbox	SY or SQ YD	Square Yard
BM	Bench Mark	ML or M/L	Match Line	STD	Standard
BR	Bridge	N	North	SDD	Standard Detail Drawings
C or C/L	Center Line	Y	North Grid Coordinate	STH	State Trunk Highways
CC	Center to Center	O.A.L.	Overall Length	STA	Station
CTH	County Trunk Highway	OD	Outside Diameter	SS	Storm Sewer
CR	Creek	PLE	Permanent Limited Easement	SG	Subgrade
CR	Crushed	PT	Point	SE	Superelevation
CY or CU YD	Cubic Yard	PC	Point of Curvature	SL or S/L	Survey Line
CP	Culvert Pipe	PI	Point of Intersection	SV	Septic Vent
C & G	Curb and Gutter	PRC	Point of Reverse Curvature	T	Tangent
D	Degree of Curve	PT	Point of Tangency	TEL	Telephone
DHV	Design Hour Volume	POC	Point On Curve	TEMP	Temporary
DIA	Diameter	POT	Point on Tangent	TI	Temporary Interest
E	East	PVC	Polyvinyl Chloride	TLE	Temporary Limited Easement
X	East Grid Coordinate	PCC	Portland Cement Concrete	t	Ton
ELEC	Electric (al)	LB	Pound	T or TN	Town
EL or ELEV	Elevation	PSI	Pounds Per Square Inch	TRANS	Transition
ESALS	Equivalent Single Axle Loads	PE	Private Entrance	TL or T/L	Transit Line
EBS	Excavation Below Subgrade	R	Radius	T	Trucks (percent of)
ESTR	Existing Sign to Remain	RR	Railroad	TYP	Typical
FF	Face to Face	R	Range	UNCL	Unclassified
FE	Field Entrance	RL or R/L	Reference Line	UG	Underground Cable
F	Fill	RP	Reference Point	USH	United States Highway
FG	Finished Grade	RCCP	Reinforced Concrete Culvert	VAR	Variable
FL or F/L	Flow Line		Pipe	V	Velocity or Design Speed
FT	Foot	REQ'D	Required	VERT	Vertical
FTG	Footing	RES	Residence or Residential	VC	Vertical Curve
GN	Grid North	RW	Retaining Wall	VOL	Volume
HT	Height	RT	Right	WM	Water Main
CWT	Hundredweight	RHF	Right-Hand Forward	WV	Water Valve
HYD	Hydrant	R/W	Right-of-Way	W	West
INL	Inlet	R	River	WB	Westbound
ID	Inside Diameter	RD	Road	YD	Yard

2

	HYDROLOGIC SOIL GROUP											
	A			B			C			D		
	SLOPE RANGE (PERCENT)			SLOPE RANGE (PERCENT)			SLOPE RANGE (PERCENT)			SLOPE RANGE (PERCENT)		
LAND USE	0-2	2-6	6 & OVER	0-2	2-6	6 & OVER	0-2	2-6	6 & OVER	0-2	2-6	6 & OVER
ROW CROPS	.08 .22	.16 .30	.22 .38	.12 .26	.20 .34	.27 .44	.15 .30	.24 .37	.33 .50	.19 .34	.28 .41	.38 .56
MEDIAN STRIP TURF	.19 .24	.20 .26	.24 .30	.19 .25	.22 .28	.26 .33	.20 .26	.23 .30	.30 .37	.20 .27	.25 .32	.30 .40
SIDE SLOPE TURF			.25 .32			.27 .34			.28 .36			.30 .38
PAVEMENT												
ASPHALT	.70 - .95											
CONCRETE	.80 - .95											
BRICK	.70 - .80											
DRIVES, WALKS	.75 - .85											
ROOFS	.75 - .95											
GRAVEL ROADS, SHOULDERS	.40 - .60											

TOTAL PROJECT AREA= 1.25 ACRES
TOTAL AREA EXPECTED TO BE DISTURBED BY CONSTRUCTION ACTIVITIES = 1.03 ACRES

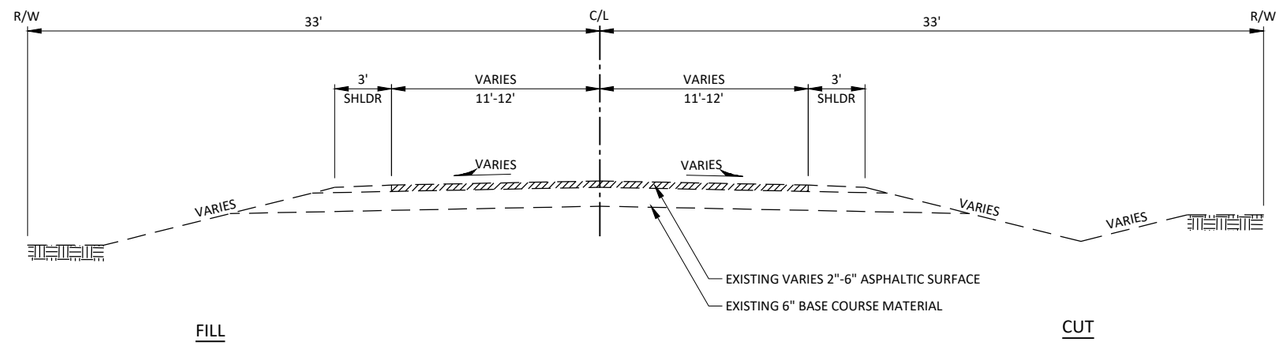

TYPICAL EXISTING SECTION

CTH G

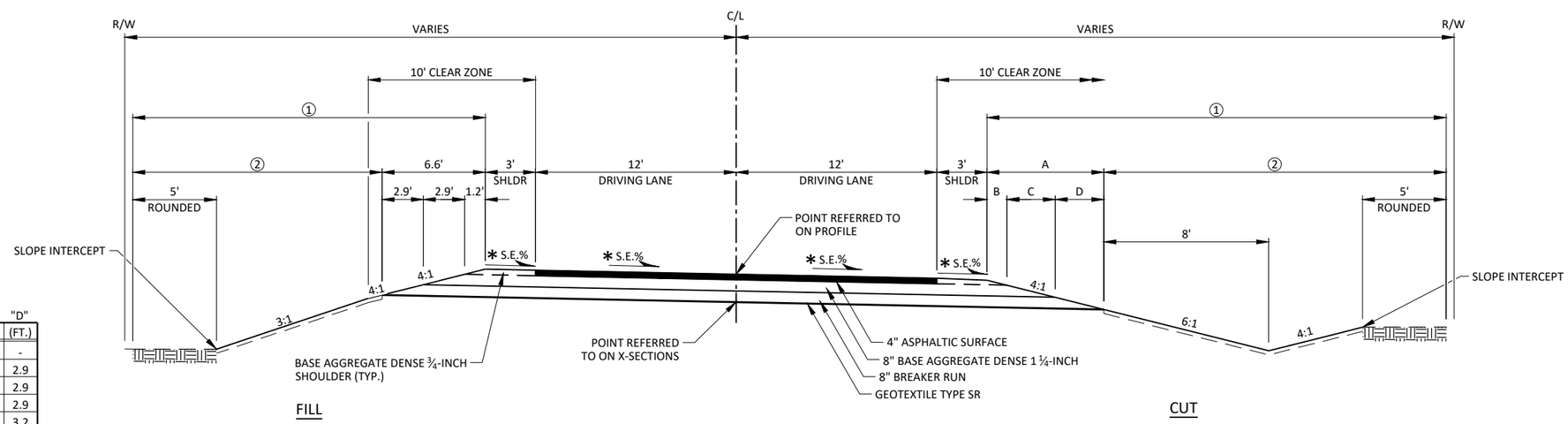

TYPICAL FINISHED SUPERELEVATED SECTION

CTH G

SUPERELEVATION TABLE

STATION	LEFT	RIGHT	"A" (FT.)	"B" (FT.)	"C" (FT.)	"D" (FT.)
12+00	MATCH EXISTING	MATCH EXISTING	-	-	-	-
12+50	2.0	2.0	7.0	1.2	2.9	2.9
13+00	0.8	2.0	7.0	1.2	2.9	2.9
13+50	1.6	2.0	7.0	1.2	2.9	2.9
14+00	4.1	4.1	8.0	1.6	3.2	3.2
14+50	6.0	6.0	8.8	1.8	3.5	3.5
15+00	6.0	6.0	8.8	1.8	3.5	3.5
15+50	6.0	6.0	8.8	1.8	3.5	3.5
16+00	6.0	6.0	8.8	1.8	3.5	3.5
16+50	2.4	2.4	7.2	1.3	3.0	3.0
17+00	1.1	1.1	6.7	1.3	2.6	2.6
17+50	4.0	4.0	5.8	1.2	2.3	2.3
17+75	MATCH EXISTING	MATCH EXISTING	-	-	-	-

* SEE SUPERELEVATION TABLE

① LIMITS OF SEEDING MIXTURE NO. 20 OR SEEDING MIXTURE NO. 60 & FERTILIZER TYPE B (AS DIRECTED BY ENGINEER)

② LIMITS OF SALVAGED TOPSOIL & EROSION MAT URBAN CLASS I TYPE B (AS DIRECTED BY ENGINEER)

2

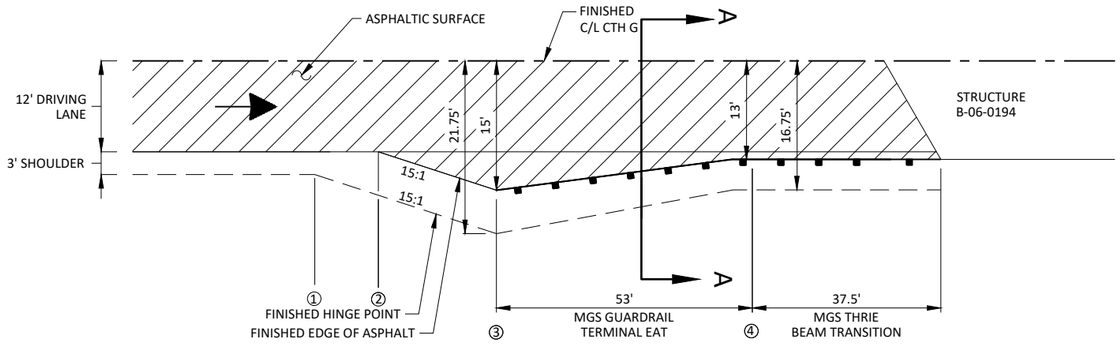

GUARDRAIL LAYOUT DETAIL

GUARDRAIL LAYOUT TABLE

QUADRANT	LOCATION	STATION ①	STATION ②	STATION ③	STATION ④
SOUTHWEST	MAINLINE, LT.	12+50	13+06	13+51	14+04
SOUTHEAST	MAINLINE, RT.	12+57	13+13	13+58	14+11
NORTHWEST	MAINLINE, LT.	16+77	16+23	15+79	15+27
NORTHEAST	MAINLINE, RT.	16+97	16+41	15+95	15+40

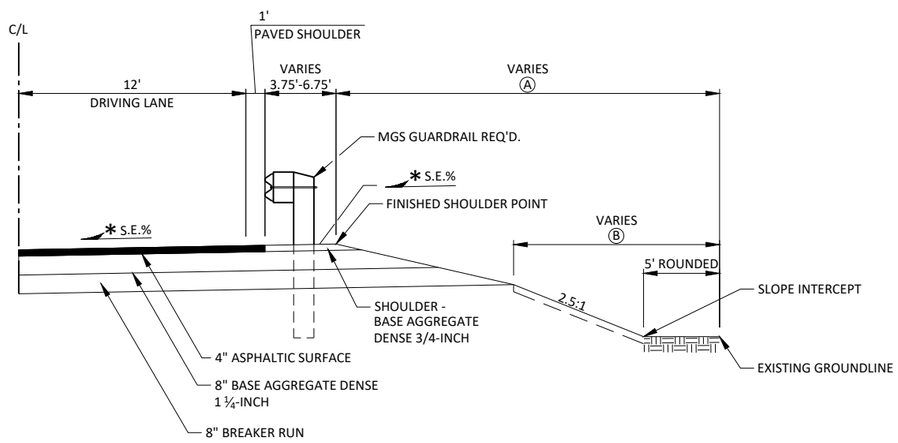

SECTION A-A

* SEE SUPERELEVATION TABLE

Ⓐ LIMITS OF FERTILIZER TYPE B AND SEEDING MIXTURE NO. 20 OR NO. 60 (AS DIRECTED BY THE ENGINEER).

Ⓑ LIMITS OF SALVAGED TOPSOIL AND EROSION MAT URBAN CLASS I TYPE B (AS DIRECTED BY THE ENGINEER).

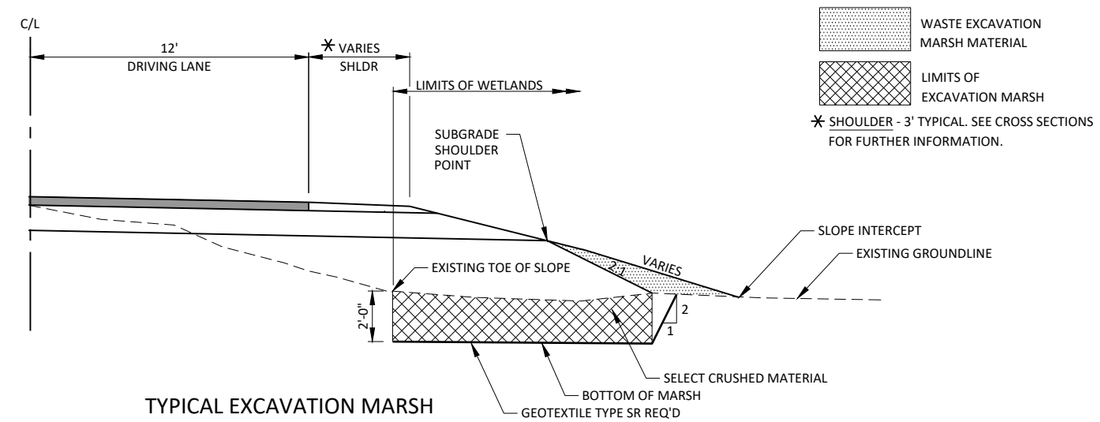

TYPICAL EXCAVATION MARSH

STA. 12+50 - STA. 14+00, LT.
STA. 13+00 - STA. 14+45, RT.
STA. 14+96 - STA. 15+00, LT.
STA. 15+50 - STA. 17+00, RT.

2

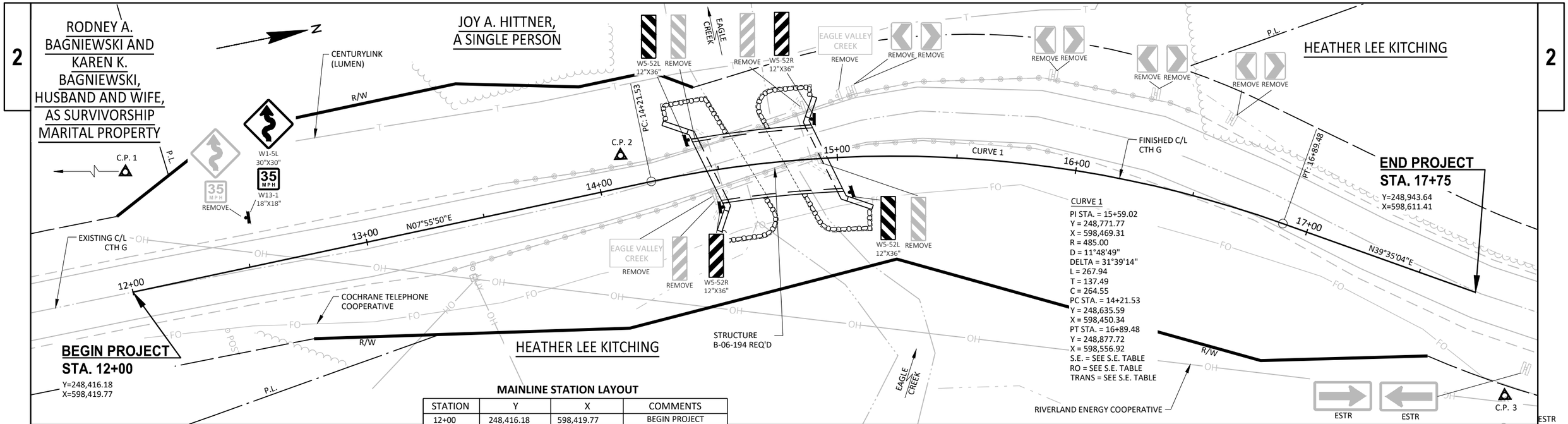

MAINLINE STATION LAYOUT

STATION	Y	X	COMMENTS
12+00	248,416.18	598,419.77	BEGIN PROJECT
12+50	248,465.70	598,426.67	-
13+00	248,515.22	598,433.57	-
13+50	248,564.74	598,440.47	-
14+00	248,614.26	598,447.37	-
14+45.18	248,658.93	598,454.17	END OF DECK
14+50	248,663.66	598,455.09	-
14+95.88	248,708.15	598,466.19	END OF DECK
15+00	248,712.10	598,467.39	-
15+50	248,759.01	598,484.61	-
16+00	248,803.91	598,506.57	-
16+50	248,846.31	598,533.03	-
17+00	248,885.83	598,563.62	-
17+50	248,924.37	598,595.48	-
17+75	248,943.64	598,611.41	END PROJECT

CONTROL POINTS

NO.	STA.	DESCRIPTION	Y	X
1	11+05.64	¾" IRON REBAR SET, 18.65' LT.	248,325.01	598,388.46
2	14+11.21	¾" IRON REBAR SET, 13.32' LT.	248,627.21	598,435.73
3	17+99.86	¾" IRON REBAR SET, 37.30' RT.	248,940.43	598,656.27

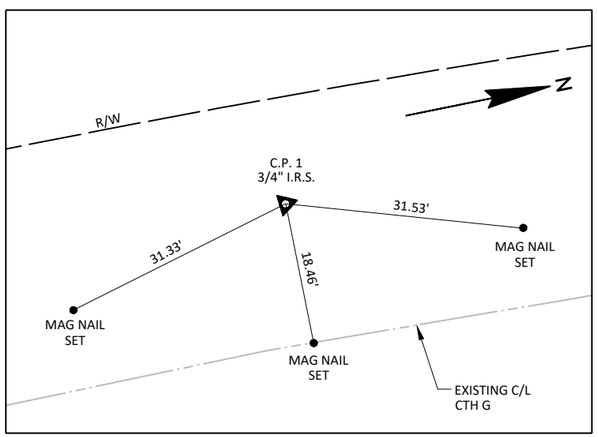

TIES TO C.P. 1

STA. 11+05.64; 18.65' LT.
Y = 248,325.01
X = 598,388.46

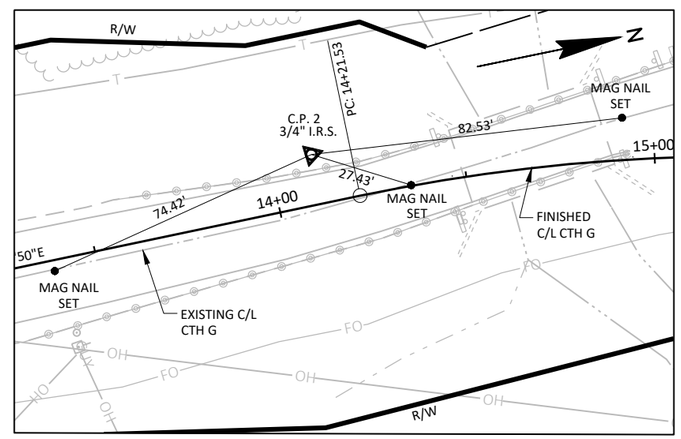

TIES TO C.P. 2

STA. 14+11.21; 13.32' LT.
Y = 248,627.21
X = 598,435.73

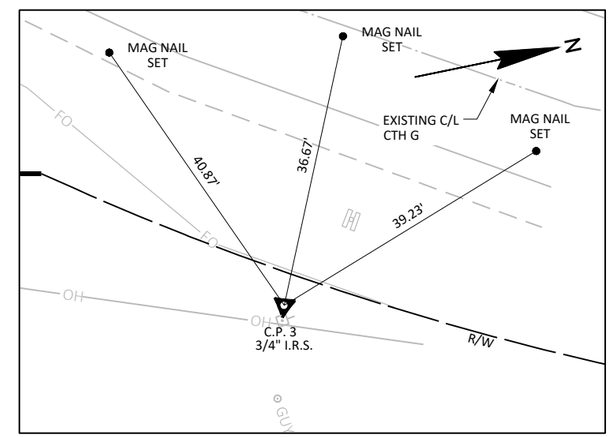

TIES TO C.P. 3

STA. 17+99.86; 37.30' RT.
Y = 248,940.43
X = 598,656.27

PROJECT NO: 7361-00-70	HWY: CTH G	COUNTY: BUFFALO	ALIGNMENT AND TIES/ PERMANENT SIGNING	SHEET 5	E

7361-00-70

Line	Item	Item Description	Unit	Total	Qty
0002	201.0105	Clearing	STA	2.000	2.000
0004	201.0205	Grubbing	STA	2.000	2.000
0006	203.0260	Removing Structure Over Waterway Minimal Debris (structure) 01. P-06-92	EACH	1.000	1.000
0008	205.0100	Excavation Common	CY	260.000	260.000
0010	205.0400	Excavation Marsh	CY	620.000	620.000
0012	206.1000	Excavation for Structures Bridges (structure) 01. B-06-194	LS	1.000	1.000
0014	208.0100	Borrow	CY	4,520.000	4,520.000
0016	210.1500	Backfill Structure Type A	TON	690.000	690.000
0018	213.0100	Finishing Roadway (project) 01. 7361-00-70	EACH	1.000	1.000
0020	305.0110	Base Aggregate Dense 3/4-Inch	TON	160.000	160.000
0022	305.0120	Base Aggregate Dense 1 1/4-Inch	TON	1,150.000	1,150.000
0024	311.0110	Breaker Run	TON	1,190.000	1,190.000
0026	312.0110	Select Crushed Material	TON	1,620.000	1,620.000
0028	455.0605	Tack Coat	GAL	85.000	85.000
0030	465.0105	Asphaltic Surface	TON	380.000	380.000
0032	502.0100	Concrete Masonry Bridges	CY	219.000	219.000
0034	502.3200	Protective Surface Treatment	SY	200.000	200.000
0036	505.0400	Bar Steel Reinforcement HS Structures	LB	5,060.000	5,060.000
0038	505.0600	Bar Steel Reinforcement HS Coated Structures	LB	25,570.000	25,570.000
0040	513.4061	Railing Tubular Type M	LF	105.000	105.000
0042	516.0500	Rubberized Membrane Waterproofing	SY	12.000	12.000
0044	550.1120	Piling Steel HP 12-Inch X 53 Lb	LF	1,120.000	1,120.000
0046	606.0400	Riprap Extra-Heavy	CY	270.000	270.000
0048	612.0406	Pipe Underdrain Wrapped 6-Inch	LF	160.000	160.000
0050	614.0920	Salvaged Rail	LF	600.000	600.000
0052	614.2500	MGS Thrie Beam Transition	LF	160.000	160.000
0054	614.2610	MGS Guardrail Terminal EAT	EACH	4.000	4.000
0056	618.0100	Maintenance And Repair of Haul Roads (project) 01. 7361-00-70	EACH	1.000	1.000
0058	619.1000	Mobilization	EACH	1.000	1.000
0060	624.0100	Water	MGAL	22.000	22.000
0062	625.0500	Salvaged Topsoil	SY	2,500.000	2,500.000
0064	628.1504	Silt Fence	LF	1,200.000	1,200.000
0066	628.1520	Silt Fence Maintenance	LF	2,400.000	2,400.000
0068	628.1905	Mobilizations Erosion Control	EACH	3.000	3.000
0070	628.1910	Mobilizations Emergency Erosion Control	EACH	3.000	3.000
0072	628.2008	Erosion Mat Urban Class I Type B	SY	2,500.000	2,500.000
0074	628.6005	Turbidity Barriers	SY	330.000	330.000
0076	628.7504	Temporary Ditch Checks	LF	90.000	90.000
0078	629.0210	Fertilizer Type B	CWT	5.000	5.000
0080	630.0120	Seeding Mixture No. 20	LB	100.000	100.000
0082	630.0160	Seeding Mixture No. 60	LB	10.000	10.000
0084	630.0200	Seeding Temporary	LB	100.000	100.000
0086	630.0300	Seeding Borrow Pit	LB	95.000	95.000
0088	630.0500	Seed Water	MGAL	170.000	170.000
0090	633.5100	Markers Row	EACH	16.000	16.000
0092	634.0612	Posts Wood 4x6-Inch X 12-FT	EACH	4.000	4.000
0094	634.0616	Posts Wood 4x6-Inch X 16-FT	EACH	1.000	1.000
0096	637.2230	Signs Type II Reflective F	SF	20.500	20.500
0098	638.2602	Removing Signs Type II	EACH	16.000	16.000

7361-00-70

Line	Item	Item Description	Unit	Total	Qty
0100	638.3000	Removing Small Sign Supports	EACH	11.000	11.000
0102	642.5001	Field Office Type B	EACH	1.000	1.000
0104	643.0420	Traffic Control Barricades Type III	DAY	1,530.000	1,530.000
0106	643.0705	Traffic Control Warning Lights Type A	DAY	2,380.000	2,380.000
0108	643.0900	Traffic Control Signs	DAY	1,190.000	1,190.000
0110	643.5000	Traffic Control	EACH	1.000	1.000
0112	645.0111	Geotextile Type DF Schedule A	SY	110.000	110.000
0114	645.0120	Geotextile Type HR	SY	370.000	370.000
0116	645.0135	Geotextile Type SR	SY	3,830.000	3,830.000
0118	650.4500	Construction Staking Subgrade	LF	525.000	525.000
0120	650.5000	Construction Staking Base	LF	525.000	525.000
0122	650.6500	Construction Staking Structure Layout (structure) 01. B-06-194	LS	1.000	1.000
0124	650.9910	Construction Staking Supplemental Control (project) 01. 7361-00-70	LS	1.000	1.000
0126	650.9920	Construction Staking Slope Stakes	LF	525.000	525.000
0128	690.0150	Sawing Asphalt	LF	48.000	48.000
0130	715.0502	Incentive Strength Concrete Structures	DOL	1,314.000	1,314.000
0132	999.2000.S	Installing and Maintaining Bird Deterrent System (Station) 01. Station 14+45	EACH	1.000	1.000

ALL ITEMS 010 UNLESS OTHERWISE NOTED

3

CLEARING & GRUBBING

STATION - STATION	LOCATION	201.0105 CLEARING (STA)	201.0205 GRUBBING (STA)
13+00 - 14+00	MAINLINE	1	1
16+00 - 17+00	MAINLINE	1	1
	TOTAL =	2	2

BASE AGGREGATE DENSE / BREAKER RUN / GEOTEXTILE TYPE SR

STATION - STATION	LOCATION	305.0110 BASE AGGREGATE DENSE 3/4-INCH (TON)	305.0120 BASE AGGREGATE DENSE 1 1/4-INCH (TON)	311.0110 BREAKER RUN (TON)	*645.0135 GEOTEXTILE TYPE SR (SY)
12+00 - 14+45	MAINLINE	75	540	560	1290
14+95 - 17+75	MAINLINE	85	610	630	1450
	TOTALS =	160	1150	1190	2740

*MORE LISTED UNDER 312.0110 SELECT CRUSHED MATERIAL

ASPHALTIC SURFACE

STATION - STATION	LOCATION	455.0605 TACK COAT (GAL)	465.0105 ASPHALTIC SURFACE (TON)
12+00 - 14+45	MAINLINE	40	180
14+95 - 17+75	MAINLINE	45	200
	TOTALS =	85	380

3

EARTHWORK SUMMARY

STATION - STATION	LOCATION	205.0100 COMMON EXCAVATION CUT (1) (CY)	AVAILABLE MATERIAL (CY) (2)	205.0400 EXCAVATION MARSH (3) (CY)	REDUCED MARSH IN FILL (CY) FACTOR 0.6	UNEXPANDED FILL (CY)	EXPANDED FILL (CY) FACTOR 1.25	MASS ORDINATE +/- (4) (CY)	208.0100 BORROW (CY)	WASTE (CY)
12+00 - 17+75	MAINLINE	260	260	-	-	4120	5150	-4890	4890	0
12+00 - 17+75 (MARSH)	MAINLINE	0	0	620	370	0	0	370	-370	0
	TOTALS =	260	260	620	370	4120	5150	-4520	4520	0

NOTES:
1.) COMMON EXCAVATION IS THE SUM OF THE CUT, ITEM NUMBER 205.0100
2.) AVAILABLE MATERIAL = CUT
3). MARSH EXCAVATION - AREA TO BE WRAPPED WITH GEOTEXTILE TYPE SR AND BACKFILLED WITH SELECT CRUSHED MATERIAL
4.) THE MASS ORDINATE + OR - QTY CALCULATED FOR THE DIVISION. PLUS QUANTITY INDICATES AN EXCESS OF MATERIAL WITHIN THE DIVISION. MINUS INDICATES A SHORTAGE OF MATERIAL WITHIN THE DIVISION

TEMPORARY DITCH CHECKS

STATION	LOCATION	628.7504 TEMPORARY DITCH CHECKS (LF)
12+23	MAINLINE, RT	8
12+56	MAINLINE, RT	8
14+54	MAINLINE, RT	8
15+15	MAINLINE, RT	8
16+50	MAINLINE, LT	8
16+67	MAINLINE, LT	8
16+85	MAINLINE, LT	8
17+02	MAINLINE, LT	8
17+35	MAINLINE, LT	8
-	UNDISTRIBUTED	18
	TOTALS =	90

MARSH BACKFILL

STATION - STATION	LOCATION	DESCRIPTION	312.0110 SELECT CRUSHED MATERIAL (TON)	*645.0135 GEOTEXTILE TYPE SR (SY)
12+00 - 17+50	MAINLINE	MARSH BACKFILL	1620	1090
		TOTAL =	1620	1090

*MORE LISTED IN 305.0110 B.A.D

GUARDRAIL

STATION - STATION	LOCATION	614.0920 SALVAGED RAIL (LF)	614.2500 MGS THRIE BEAM TRANSITION (LF)	614.2610 MGS GUARDRAIL TERMINAL EAT (EACH)
13+57 - 16+45	MAINLINE, LT.	310	-	-
13+25 - 15+99	MAINLINE, RT.	290	-	-
14+04 - 14+41	MAINLINE, LT.	-	40	1
14+11 - 14+49	MAINLINE, RT.	-	40	1
14+91 - 15+27	MAINLINE, LT.	-	40	1
15+02 - 15+40	MAINLINE, RT.	-	40	1
	TOTALS =	600	160	4

MOBILIZATION EROSION CONTROL

PROJECT	628.1905 MOBILIZATION EROSION CONTROL (EACH)	628.1910 MOBILIZATION EMERGENCY EROSION CONTROL (EACH)
5682-00-75	3	3
TOTALS =	3	3

WATER

LOCATION	624.0100 (MGAL)
PROJECT	22
TOTAL =	22

FINISHING ITEMS

STATION - STATION	LOCATION	625.0500 SALVAGED TOPSOIL (SY)	628.2008 EROSION MAT URBAN CLASS I TYPE B (SY)	629.0210 FERTILIZER TYPE B (CWT)	630.0120 SEEDING MIXTURE NO. 20 (LB)	*630.0160 SEEDING MIXTURE NO. 60 (LB)	630.0200 SEEDING TEMPORARY (LB)	630.0300 SEEDING BORROW PIT (LB)	630.0500 SEED WATER (MGAL)
12+00 - 14+45	MAINLINE, LT	630	630	0.6	23	2	-	-	23
12+00 - 14+45	MAINLINE, RT	430	430	0.5	18	2	-	-	17
14+95 - 17+75	MAINLINE, LT	320	320	0.5	17	2	-	-	16
14+95 - 17+75	MAINLINE, RT	620	620	0.6	24	2	-	-	23
-	BORROW PIT	-	-	1.8	-	-	-	75	61
-	UNDISTRIBUTED	500	500	1	18	2	100	20	30
	TOTALS=	2500	2500	5.0	100	10	100	95	170

*ADJACENT TO WETLAND AREAS (STA. 11+50 - 14+65, LT; STA. 14+80 - 15+25, LT; STA. 16+25 - 16+75, LT; STA. 13+00 - 14+80, RT; STA. 14+80 - 17+00, RT.

SILT FENCE

STATION - STATION	LOCATION	628.1504 SILT FENCE (LF)	628.1520 SILT FENCE MAINTENANCE (LF)
12+00 - 14+56	MAINLINE, LT	270	540
14+67 - 16+34	MAINLINE, LT	190	380
12+72 - 14+68	MAINLINE, RT	190	380
14+84 - 17+88	MAINLINE, RT	290	580
-	UNDISTRIBUTED	260	520
	TOTALS =	1200	2400

ALL ITEMS 010 UNLESS OTHERWISE NOTED

3

PERMANENT SIGNING

APPROX. STATION	POSITION	SITE ID	SIGN CODE	SIGN DESCRIPTION	ORDER LINES	SIGN SIZE (INXIN)	634.0612 POSTS WOOD 4X6 INCH 12 FT (EACH)	634.0616 POSTS WOOD 4X6 INCH 16 FT (EACH)	637.2230 SIGNS TYPE II REFLECTIVE F (S.F.)	638.2602 REMOVING SIGNS TYPE II (EACH)	638.3000 REMOVING SMALL SIGN SUPPORTS (EACH)
12+50	LEFT	MAINLINE	W1-5L	LEFT WINDING ROAD		30X30	---	1	6.25	---	---
12+50	LEFT	MAINLINE	W13-1	ADVISORY SPEED: 35 MPH		18X18	---	---	2.25	---	---
12+50	LEFT	MAINLINE	W1-5L	LEFT WINDING ROAD		---	---	---	---	1	1
12+50	LEFT	MAINLINE	W13-1	ADVISORY SPEED: 35 MPH		---	---	---	---	1	---
14+40	LEFT	MAINLINE	W5-52L	BRIDGE HASH MARKS		12X36	1	---	3.00	---	---
14+44	LEFT	MAINLINE	W5-52L	BRIDGE HASH MARKS		---	---	---	---	1	1
14+47	RIGHT	MAINLINE	I3-1	EAGLE VALLEY CREEK		---	---	---	---	1	1
14+48	RIGHT	MAINLINE	W5-52R	BRIDGE HASH MARKS		---	---	---	---	1	1
14+49	RIGHT	MAINLINE	W5-52R	BRIDGE HASH MARKS		12X36	1	---	3.00	---	---
14+86	LEFT	MAINLINE	W5-52R	BRIDGE HASH MARKS		---	---	---	---	1	1
14+90	LEFT	MAINLINE	W5-52R	BRIDGE HASH MARKS		12X36	1	---	3.00	---	---
14+93	RIGHT	MAINLINE	W5-52L	BRIDGE HASH MARKS		---	---	---	---	1	1
15+03	RIGHT	MAINLINE	W5-52L	BRIDGE HASH MARKS		12X36	1	---	3.00	---	---
15+03	LEFT	MAINLINE	I3-1	EAGLE VALLEY CREEK		---	---	---	---	1	1
15+09	LEFT	MAINLINE	W1-8L	CHEVRON		---	---	---	---	1	1
15+09	LEFT	MAINLINE	W1-8R	CHEVRON		---	---	---	---	1	---
15+86	LEFT	MAINLINE	W1-8L	CHEVRON		---	---	---	---	1	1
15+86	LEFT	MAINLINE	W1-8R	CHEVRON		---	---	---	---	1	---
16+27	LEFT	MAINLINE	W1-8L	CHEVRON		---	---	---	---	1	1
16+27	LEFT	MAINLINE	W1-8R	CHEVRON		---	---	---	---	1	---
16+57	LEFT	MAINLINE	W1-8L	CHEVRON		---	---	---	---	1	1
16+57	LEFT	MAINLINE	W1-8R	CHEVRON		---	---	---	---	1	---
				PROJECT TOTALS			4	1	20.50	16	11

TURBIDITY BARRIERS

STATION	LOCATION	628.6005 TURBIDITY BARRIERS (LF)
14+45	MAINLINE, RT	130
14+95	MAINLINE, RT	130
-	UNDISTRIBUTED	70
	TOTALS =	330

TRAFFIC CONTROL

LOCATION	643.0420 BARRICADES TYPE III (DAY)	643.0705 WARNING LIGHTS TYPE A (DAY)	643.0900 SIGNS (DAY)	643.5000 TRAFFIC CONTROL (EACH)
PROJECT	1,530	2,380	1,190	1
TOTALS =	1,530	2,380	1,190	1

SAWING ASPHALT

STATION	LOCATION	690.0150 (LF)
12+00	MAINLINE	24
17+75	MAINLINE	24
	TOTAL =	48

CONSTRUCTION STAKING

STATION - STATION	650.4500 SUBGRADE (LF)	650.5000 BASE (LF)	*650.6500 STRUCTURE LAYOUT (LS)	650.9910 SUPPLEMENTAL CONTROL 01. 7361-00-70 (LS)	650.9920 SLOPE STAKES (LF)
12+00 - 14+45	245	245	-	-	245
14+95 - 17+75	280	280	-	-	280
PROJECT	-	-	1	1	-
TOTALS =	525	525	1	1	525

* CATEGORY 020

MARKERS ROW

PT #	STATION	LOCATION	OFFSET FROM FINISHED C/L FT	633.5100 MARKERS ROW (EACH)
1	12+00.00	MAINLINE, LT	32.26	1
2	12+50.00	MAINLINE, LT	57.00	1
3	13+50.00	MAINLINE, LT	57.00	1
4	14+00.00	MAINLINE, LT	45.00	1
5	14+30.00	MAINLINE, LT	45.00	1
6	14+45.00	MAINLINE, LT	35.39	1
7	14+75.91	MAINLINE, LT	41.02	1
8	16+66.68	MAINLINE, LT	45.73	1
9	17+56.08	MAINLINE, LT	35.26	1
10	17+65.00	MAINLINE, LT	34.43	1
11	17+65.00	MAINLINE, RT	31.74	1
12	17+00.00	MAINLINE, RT	57.00	1
13	15+25.00	MAINLINE, RT	43.00	1
14	14+00.00	MAINLINE, RT	58.00	1
15	12+70.00	MAINLINE, RT	34.79	1
16	12+00.00	MAINLINE, RT	33.75	1
			TOTAL=	16

R/W PROJECT NUMBER	SHEET NUMBER	TOTAL SHEETS
7361-00-00		
FEDERAL PROJECT NUMBER	4.01	2

PLAT OF RIGHT-OF-WAY REQUIRED FOR

FOUNTAIN CITY – N JCT STH 95

(EAGLE CREEK BRIDGE B-06-194)

CTH G — BUFFALO COUNTY

CONSTRUCTION PROJECT NUMBER

7361-00-70

CONVENTIONAL ABBREVIATIONS

ACCESS POINT/ DRIVEWAY CONNECTION	AP	PROPERTY LINE	PL
ACCESS RIGHTS	AR	RECORDED AS	(100')
ACRES	AC.	REFERENCE LINE	R/L
AND OTHERS	ET.AL.	RELEASE OF RIGHTS	ROR
BARN	B.	REMAINING	REM.
CENTERLINE	C/L	RIGHT-OF-WAY	R/W
CERTIFIED SURVEY MAP	CSM	SECTION	SEC.
CORNER	COR	SHED	S.
CONVEYANCE OF RIGHTS	CR	STATION	STA.
DOCUMENT	DOC.	TEMPORARY LIMITED EASEMENT	TLE
EASEMENT	EASE.	VOLUME	V.
GARAGE	G.		
HIGHWAY EASEMENT	H.E.		
HOUSE	H.		
HOUSE TRAILER	H.T.		
LAND CONTRACT	LC		
MONUMENT	MON.		
PAGE	P.		
PERMANENT LIMITED EASEMENT	PLE		

CURVE DATA

LONG CHORD	LCH
LONG CHORD BEARING	LCB
RADIUS	R
DEGREE OF CURVE	D
CENTRAL ANGLE OR DELTA	DELTA
LENGTH OF CURVE	L
TANGENT	TAN

CONVENTIONAL SYMBOLS

FOUND SURVEY MONUMENT (WITH POINT NUMBER)	o1040	PROPOSED R/W LINE	
R/W MONUMENT	○ ● (SET)	EXISTING H.E. LINE	
R/W STANDARD	△ ▲ (SET)	PROPERTY LINE	
SIGN	ISIGN	LOT & TIE LINES	
SECTION CORNER MONUMENT		SLOPE INTERCEPTS	
SECTION CORNER SYMBOL		CORPORATE LIMITS	
FEE (HATCH VARIES)		NO ACCESS (BY PREVIOUS ACQUISITION/CONTROL)	
TEMPORARY LIMITED EASEMENT		NO ACCESS (BY ACQUISTION)	
PERMANENT LIMITED EASEMENT		NO ACCESS (BY STATUTORY AUTHORITY)	
R/W BOUNDARY POINT	RWB20	SECTION LINE	
PARCEL NUMBER	8	QUARTER LINE	
UTILITY PARCEL NUMBER	92	SIXTEENTH LINE	
SIGN NUMBER (OFF PREMISE)	21-1	EXISTING CENTERLINE	
BUILDING		PROPOSED REFERENCE LINE	
		PARALLEL OFFSET	
		ENCROACHMENT	E-D/TYPE
		HIGHWAY EASEMENT	

CONVENTIONAL UTILITY SYMBOLS

				NON COMPENSABLE	COMPENSABLE
WATER	W	SANITARY SEWER	SAN		
GAS	G	STORM SEWER	SS		
TELEPHONE	T				
OVERHEAD TRANSMISSION LINES	OH	POWER POLE			
ELECTRIC	E	TELEPHONE POLE			
CABLE TELEVISION	TV	TELEPHONE PEDESTAL			
FIBER OPTIC	FO	ELECTRIC TOWER			

END RELOCATION ORDER

STA. 17+65.00

198.30' SOUTH AND 1443.50' EAST OF THE W½ CORNER OF SECTION 33, T.20N., R.11W., TOWN OF MILTON, BUFFALO COUNTY, WI

Y=248,935.93

X=598,605.04

STRUCTURE B-06-194

BEGIN RELOCATION ORDER

STA. 12+00.00

718.05' SOUTH AND 1258.23' EAST OF THE W½ CORNER OF SECTION 33, T.20N., R.11W., TOWN OF MILTON, BUFFALO COUNTY, WI

Y=248,416.18

X=598,419.77

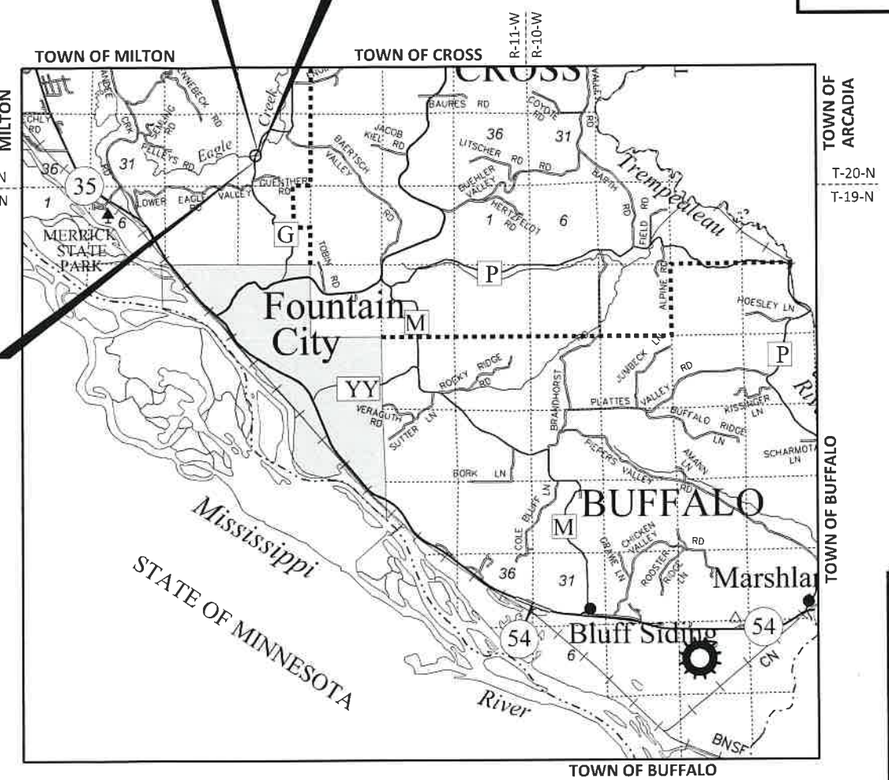

N

LAYOUT

SCALE 0 — 2 MI.

TOTAL NET LENGTH OF CENTERLINE = 0.107 MI.

NOTES

POSITIONS SHOWN ON THIS PLAT ARE WISCONSIN COUNTY COORDINATES, BUFFALO COUNTY, NAD 83 (2011) IN US SURVEY FEET. VALUES SHOWN ARE GRID COORDINATES, GRID BEARINGS, AND GRID DISTANCES. GRID DISTANCES MAY BE USED AS GROUND DISTANCES.

ALL NEW RIGHT-OF-WAY MONUMENTS WILL BE TYPE 2 MONUMENTS (TYPICALLY ¾ X 24" IRON REBARS), UNLESS OTHERWISE NOTED, AND WILL BE PLACED PRIOR TO THE COMPLETION OF THE PROJECT.

RIGHT-OF-WAY BOUNDARIES ARE DEFINED WITH COURSES OF THE PERIMETER OF THE HIGHWAY LANDS REFERENCED TO THE U.S. PUBLIC LAND SURVEY SYSTEM OR OTHER "SURVEYS OF PUBLIC RECORD."

FOR CURRENT ACCESS/DRIVEWAY INFORMATION, CONTACT THE PLANNING UNIT OF THE WISCONSIN DEPARTMENT OF TRANSPORTATION OFFICE IN LACROSSE.

ALL RIGHT-OF-WAY LINES DEPICTED IN THE NON-ACQUISITION AREAS ARE INTENDED TO RE-ESTABLISH EXISTING RIGHT-OF-WAY LINES AS DETERMINED FROM PREVIOUS PROJECTS, OTHER RECORDED DOCUMENTS, OR FROM CENTERLINE OF EXISTING PAVEMENTS.

DIMENSIONING FOR THE NEW RIGHT-OF-WAY IS MEASURED ALONG AND PERPENDICULAR TO THE NEW REFERENCE LINES.

THIS PLAT IS A GRAPHIC REPRESENTATION AND IS FOR REFERENCE PURPOSE ONLY. DEEDS MUST BE CHECKED TO DETERMINE PROPERTY BOUNDARIES AND ACCESS RIGHTS.

RECEIVED
MAY 25 2021
BY: Brandt Hahn

REVISION DATE

JEWELL associates engineers, inc.
Engineers - Architects - Surveyors
560 SUNRISE DRIVE
SPRING GREEN, WI 53588
PHONE : 608.588.7484
www.jewellassoc.com

I HEREBY CERTIFY THAT THIS PLAT WAS MADE FOR BUFFALO COUNTY, WISCONSIN AND IS CORRECT TO THE BEST OF MY KNOWLEDGE AND BELIEF.

WISCONSIN WESLEY L KRAEMER S-3026 SPRING GREEN, WIS. LAND SURVEYOR

Wes Kraemer 5-18-2021

APPROVED FOR BUFFALO COUNTY

DATE 5/19/21 Bob Plattes (NAME/TITLE) Hwy Commissioner

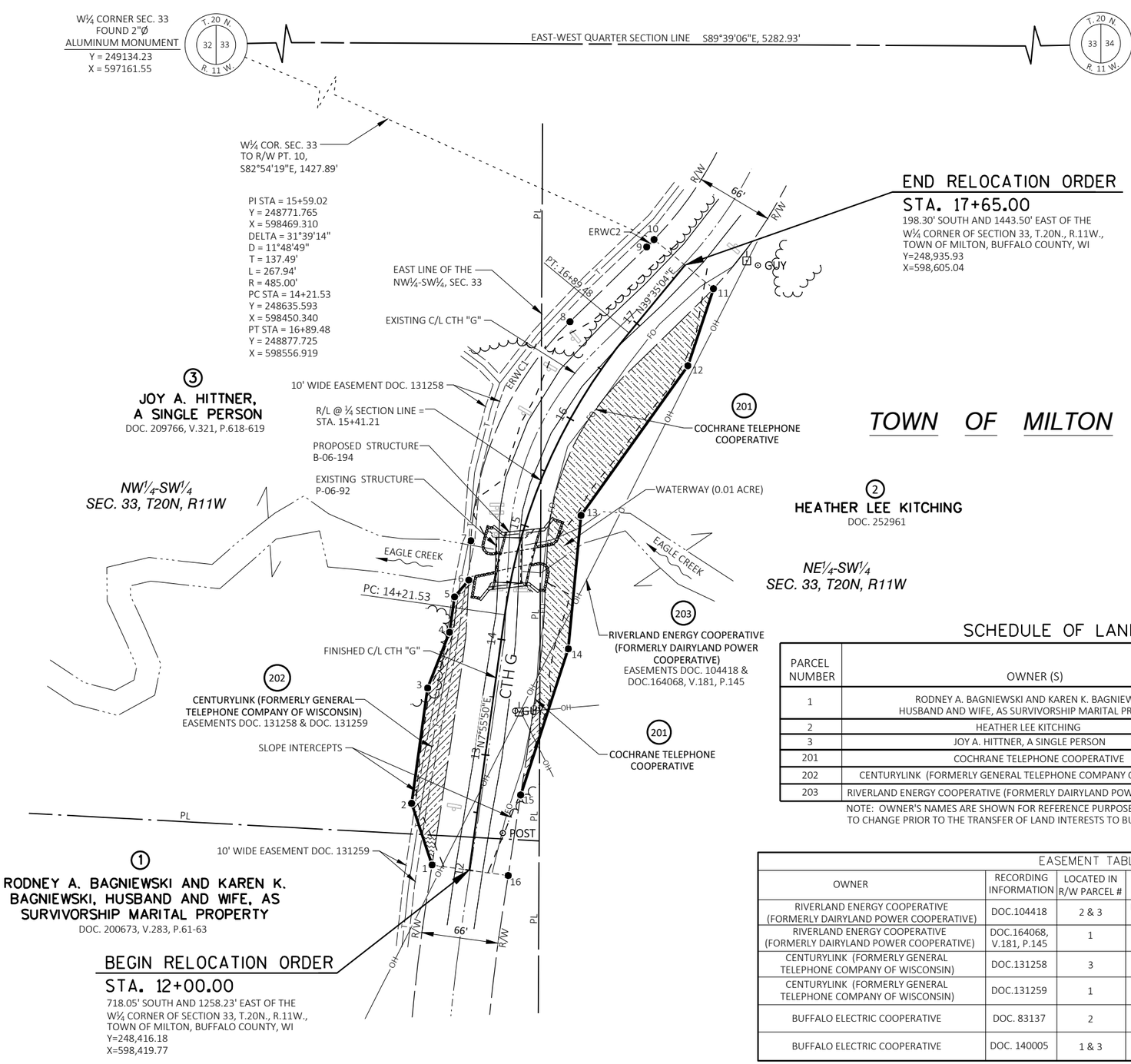

COORDINATE TABLE – NEW R/W POINTS				
PT.#	STATION	OFFSET	Y	X
1	12+00.00	32.26' LT.	248420.63	598387.82
2	12+50.00	57.00' LT.	248473.56	598370.22
3	13+50.00	57.00' LT.	248572.61	598384.02
4	14+00.00	45.00' LT.	248620.47	598402.80
5	14+30.00	45.00' LT.	248650.95	598407.13
6	14+45.00	35.39' LT.	248665.32	598419.37
7	14+75.91	41.02' LT.	248699.09	598421.10
8	16+66.68	45.73' LT.	248887.27	598506.24
9	17+56.08	35.26' LT.	248951.53	598572.18
10	17+65.00	34.43' LT.	248957.87	598578.51
11	17+65.00	31.74' RT.	248915.70	598629.51
12	17+00.00	57.00' RT.	248849.51	598607.55
13	15+25.00	43.00' RT.	248720.96	598515.76
14	14+00.00	58.00' RT.	248606.26	598504.81
15	12+70.00	34.79' RT.	248480.71	598463.89
16	12+00.00	33.75' RT.	248411.52	598453.20

RIGHT OF WAY LINE TABLE		
POINT TO POINT	BEARING	DISTANCE
1 TO 2	N18°23'46"W	55.79'
2 TO 3	N07°55'50"E	100.00'
3 TO 4	N21°25'35"E	51.42'
4 TO 5	N08°04'51"E	30.79'
5 TO 6	N40°25'43"E	18.87'
6 TO 7	N02°56'23"E	33.82'
7 TO 8	SEE ERWC1 DATA	
8 TO 9	N45°44'42"E	92.07'
9 TO 10	SEE ERWC2 DATA	
10 TO 11	S50°24'56"E	66.17'
11 TO 12	S18°21'00"W	69.73'
12 TO 13	S35°31'39"W	157.96'
13 TO 14	S05°27'12"W	115.22'
14 TO 15	S18°03'11"W	132.06'
15 TO 16	S08°47'03"W	70.01'
16 TO 17	N82°04'10"W	66.01'

ERWC1 CURVE DATA PT. 7 TO PT. 8
ARC LENGTH = 211.43'
RADIUS = 283.00'
DELTA = 42°48'19"
CHORD BEARING = N24°20'33"E
CHORD LENGTH = 206.54'

ERWC2 CURVE DATA PT. 9 TO PT. 10
ARC LENGTH = 8.96'
RADIUS = 317.00'
DELTA = 01°37'07"
CHORD BEARING = N44°56'08"E
CHORD LENGTH = 8.96'

NOTE: EXISTING C/L OF CTH G BASED ON CENTERLINE OF EXISTING PAVEMENT.

EXISTING RIGHT-OF-WAY FOR CTH G BASED ON THE CENTERLINE OF EXISTING PAVEMENT AND WIS. STATUTE 82.31(2).

SCHEDULE OF LANDS & INTERESTS REQUIRED

PARCEL NUMBER	OWNER (S)	INTEREST REQUIRED	R/W ACRES REQUIRED		
			NEW	EXISTING	TOTAL
1	RODNEY A. BAGNIEWSKI AND KAREN K. BAGNIEWSKI, HUSBAND AND WIFE, AS SURVIVORSHIP MARITAL PROPERTY	FEE	0.004	0.04	0.05
2	HEATHER LEE KITCHING	FEE	0.25	0.30	0.55
3	JOY A. HITTNER, A SINGLE PERSON	FEE	0.12	0.53	0.65
201	COCHRANE TELEPHONE COOPERATIVE	RELEASE OF RIGHTS			
202	CENTURYLINK (FORMERLY GENERAL TELEPHONE COMPANY OF WISCONSIN)	RELEASE OF RIGHTS			
203	RIVERLAND ENERGY COOPERATIVE (FORMERLY DAIRYLAND POWER COOPERATIVE)	RELEASE OF RIGHTS			

NOTE: OWNER'S NAMES ARE SHOWN FOR REFERENCE PURPOSES ONLY AND ARE SUBJECT TO CHANGE PRIOR TO THE TRANSFER OF LAND INTERESTS TO BUFFALO COUNTY.

EASEMENT TABLE			
OWNER	RECORDING INFORMATION	LOCATED IN R/W PARCEL #	REMARKS
RIVERLAND ENERGY COOPERATIVE (FORMERLY DAIRYLAND POWER COOPERATIVE)	DOC.104418	2 & 3	BLANKET EASEMENT OVER THE E½ OF THE SW¼ AND THE NW¼-SW¼ NORTH OF EAGLE CREEK AND 5 ACRES SOUTH OF EAGLE CREEK
RIVERLAND ENERGY COOPERATIVE (FORMERLY DAIRYLAND POWER COOPERATIVE)	DOC.164068, V.181, P.145	1	80 FOOT WIDE EASEMENT IN THE NW¼-SW¼ SOUTH OF EAGLE CREEK
CENTURYLINK (FORMERLY GENERAL TELEPHONE COMPANY OF WISCONSIN)	DOC.131258	3	10' WIDE EASEMENT IN THE NORTH PART OF THE NW¼-SW¼
CENTURYLINK (FORMERLY GENERAL TELEPHONE COMPANY OF WISCONSIN)	DOC.131259	1	10' WIDE EASEMENT IN THE SOUTH PART OF THE NW¼-SW¼
BUFFALO ELECTRIC COOPERATIVE	DOC. 83137	2	50' WIDE EASEMENT IN THE THE E½ OF THE SW¼
BUFFALO ELECTRIC COOPERATIVE	DOC. 140005	1 & 3	BLANKET EASEMENT OVER THE NW¼-SW¼

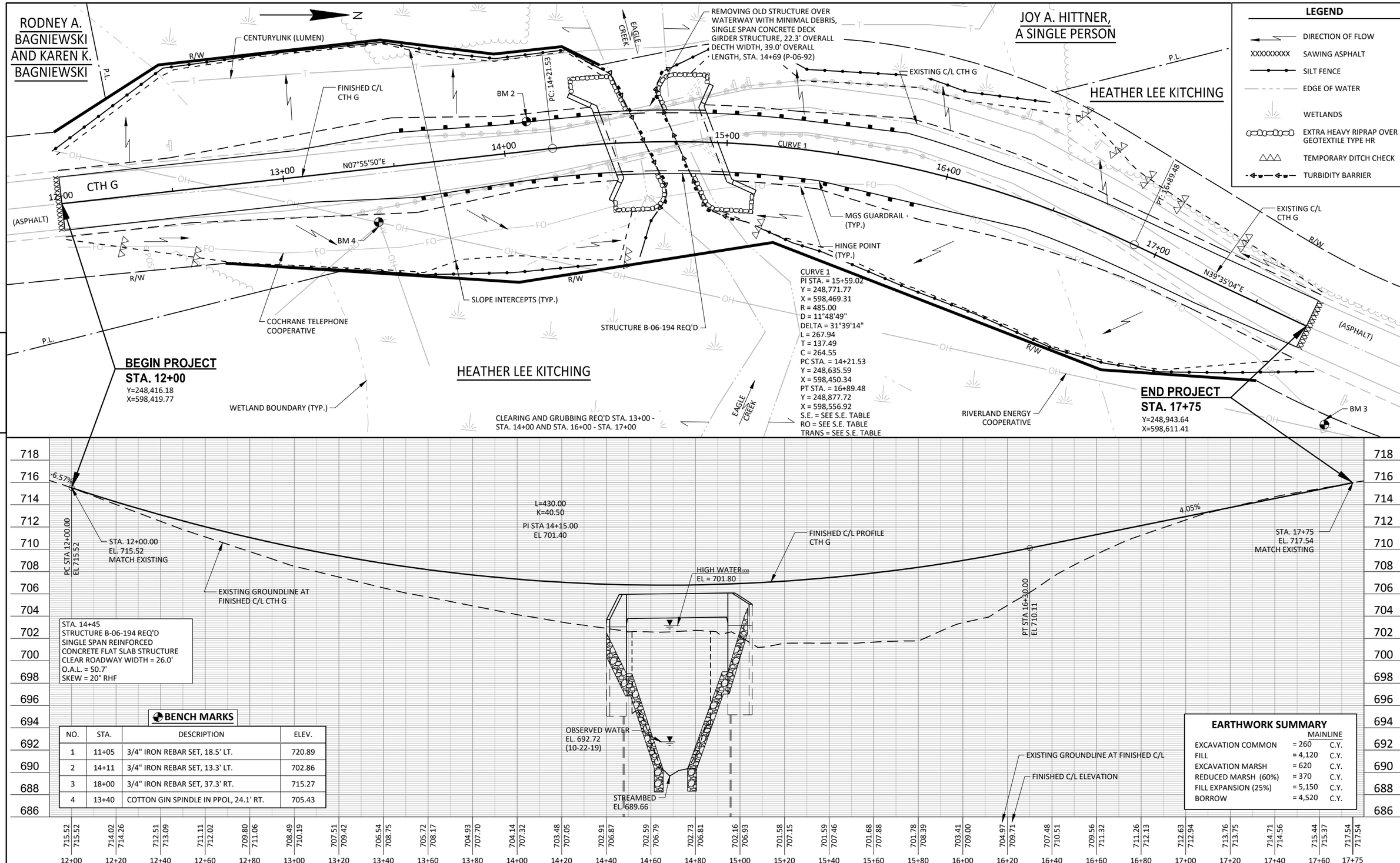

BENCH MARKS

NO.	STA.	DESCRIPTION	ELEV.
1	11+05	3/4" IRON REBAR SET, 18.5' LT.	720.89
2	14+11	3/4" IRON REBAR SET, 13.3' LT.	702.86
3	18+00	3/4" IRON REBAR SET, 37.3' RT.	715.27
4	13+40	COTTON GIN SPINDLE IN PPOL, 24.1' RT.	705.43

EARTHWORK SUMMARY

	MAINLINE	
EXCAVATION COMMON	= 260	C.Y.
FILL	= 4,120	C.Y.
EXCAVATION MARSH	= 620	C.Y.
REDUCED MARSH (60%)	= 370	C.Y.
FILL EXPANSION (25%)	= 5,150	C.Y.
BORROW	= 4,520	C.Y.

PROJECT NO: 7361-00-70	HWY: CTH G	COUNTY: BUFFALO	PLAN AND PROFILE: MAINLINE	SHEET 12	E

FILE NAME : S:\PROJECTS\W11602 WISDOT - CTH G BRIDGE, BUFFALO CO\SHEETSPLAN\PLAN & PROFILE SHEETS\73610000_P&P.DWG PLOT DATE : 8/20/2021 1:14:08 PM PLOT BY : AUSTIN KASZUBSKI PLOT SCALE : 1" = 1' LAYOUT : LAYOUT1

Standard Detail Drawing List

08E08-03	TYPICAL INSTALLATIONS OF EROSION BALES / TEMPORARY DITCH CHECKS
08E09-06	SILT FENCE
08E11-02	TURBIDITY BARRIER
12A03-10	NAME PLATE (STRUCTURES)
14B42-07A	MIDWEST GUARDRAIL SYSTEM (MGS) GUARDRAIL
14B42-07B	MIDWEST GUARDRAIL SYSTEM (MGS) GUARDRAIL
14B42-07C	MIDWEST GUARDRAIL SYSTEM (MGS) GUARDRAIL
14B42-07D	MIDWEST GUARDRAIL SYSTEM (MGS) GUARDRAIL
14B44-04A	MIDWEST GUARDRAIL SYSTEM ENERGY ABSORBING TERMINAL (MGS)
14B44-04B	MIDWEST GUARDRAIL SYSTEM ENERGY ABSORBING TERMINAL (MGS)
14B44-04C	MIDWEST GUARDRAIL SYSTEM ENERGY ABSORBING TERMINAL (MGS)
14B45-05A	MIDWEST GUARDRAIL SYSTEM THRIE BEAM TRANSITION (MGS)
14B45-05B	MIDWEST GUARDRAIL SYSTEM THRIE BEAM TRANSITION (MGS)
14B45-05C	MIDWEST GUARDRAIL SYSTEM THRIE BEAM TRANSITION (MGS)
14B45-05H	MIDWEST GUARDRAIL SYSTEM THRIE BEAM TRANSITION (MGS)
15A01-13A	MARKER POST FOR RIGHT-OF-WAY
15C02-08A	BARRICADES AND SIGNS FOR MAINLINE CLOSURES
15C02-08B	BARRICADES AND SIGNS FOR VARIOUS CLOSURES
15C06-09	SIGNING & MARKING FOR TWO LANE BRIDGES
15C11-09B	CHANNELIZING DEVICES DRUMS, CONES, BARRICADES AND VERTICAL PANELS
15D38-02A	TEMPORARY TRAFFIC CONTROL SIGN MOUNTING
15D38-02B	ATTACHMENT OF SIGNS TO POSTS

6

6

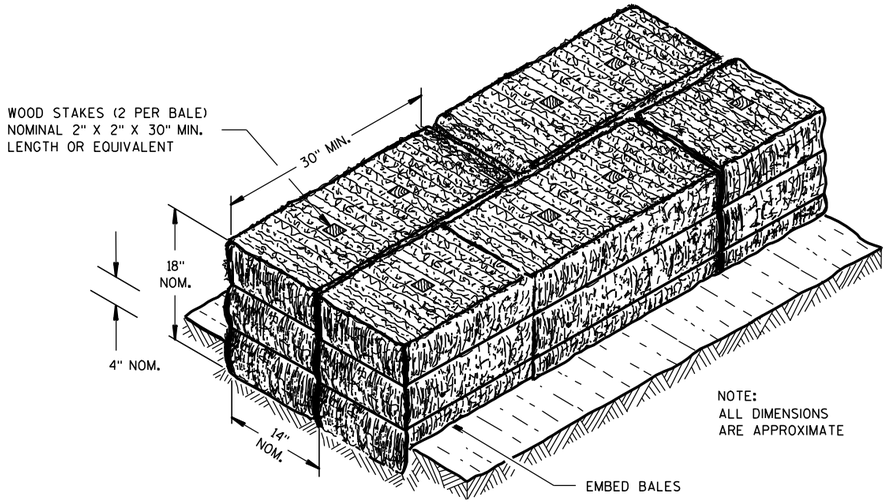

SECTION A-A

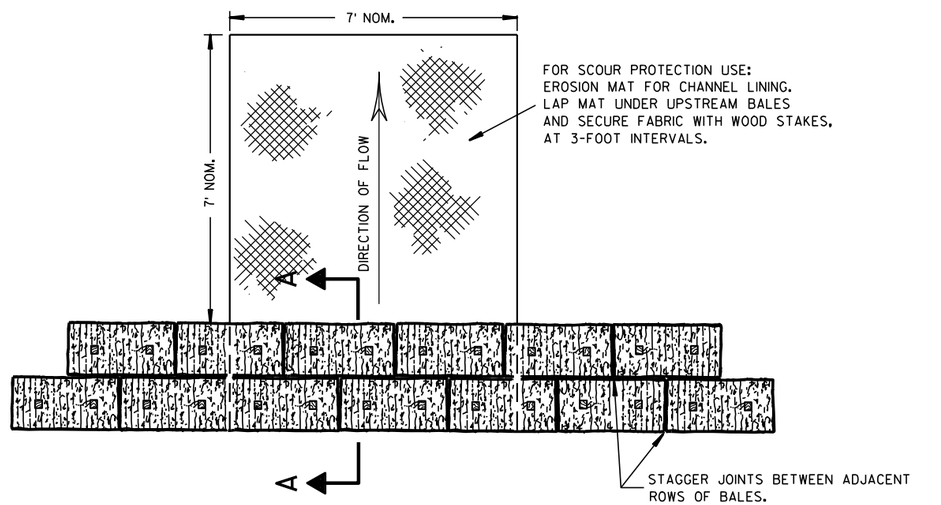

PLAN VIEW

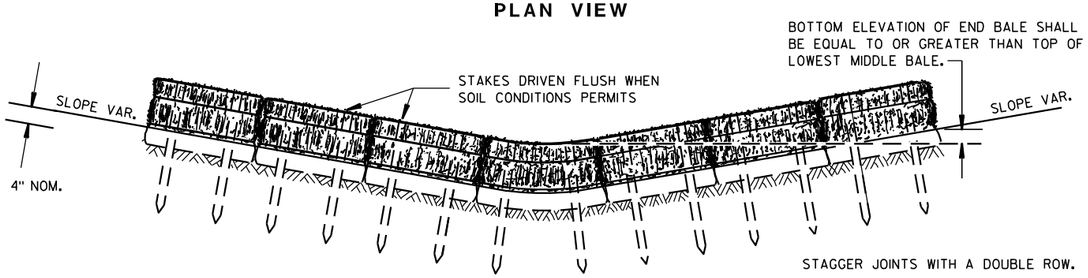

FRONT ELEVATION

TEMPORARY DITCH CHECK USING EROSION BALES ①

GENERAL NOTES

DETAILS OF CONSTRUCTION, MATERIALS AND WORKMANSHIP NOT SHOWN ON THIS DRAWING SHALL CONFORM TO THE PERTINENT REQUIREMENTS OF THE STANDARD SPECIFICATIONS AND THE APPLICABLE SPECIAL PROVISIONS.

① TEMPORARY DITCH CHECKS EITHER EROSION BALES OR MANUFACTURED SHALL BE PAID FOR UNDER THE BID ITEM OF TEMPORARY DITCH CHECK. THE DEPARTMENT WILL NOT PAY FOR TEMPORARY DITCH CHECKS CONSTRUCTED OF A SINGLE ROW OF EROSION BALES.

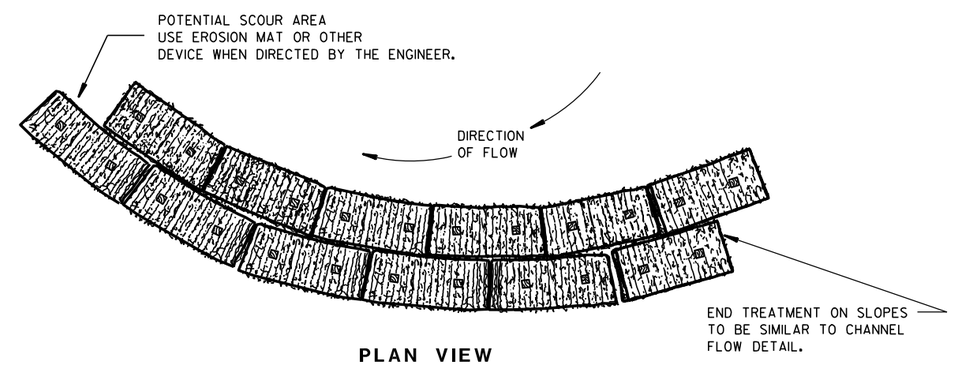

PLAN VIEW

WHEN ALTERING THE DIRECTION OF FLOW

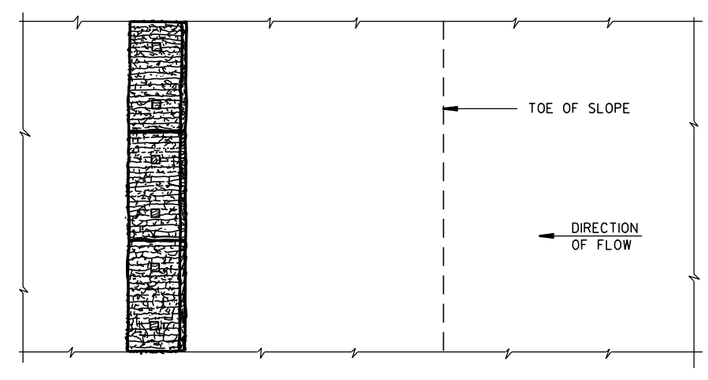

PLAN VIEW

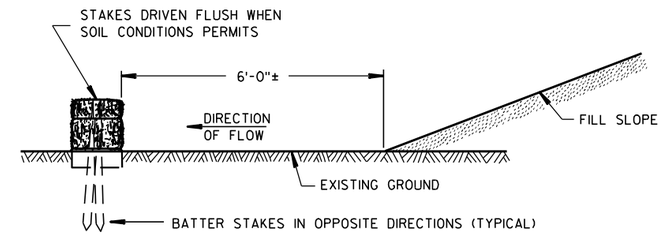

FRONT ELEVATION

WHEN EXISTING GROUND SLOPES AWAY FROM FILL SLOPE

EROSION BALES FOR SHEET FLOW

TYPICAL INSTALLATIONS OF EROSION BALES / TEMPORARY DITCH CHECKS

STATE OF WISCONSIN
DEPARTMENT OF TRANSPORTATION

APPROVED

6/04/02 — /S/ Beth Cann... — ...GINEER
DATE — CHIEF ROADWAY DEVELOP...

FHWA

6

6

S.D.D. 8 E 8-3

S.D.D. 8 E 8-3

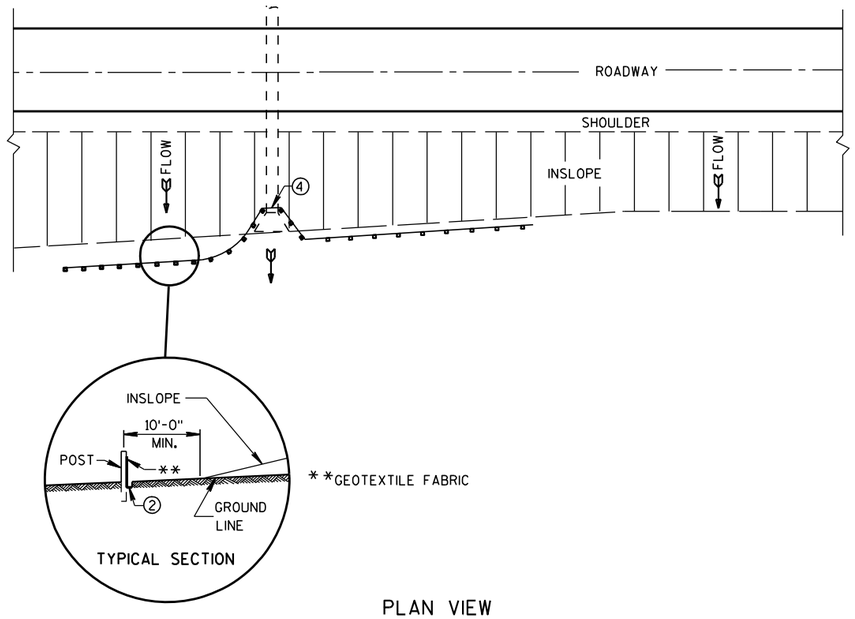

PLAN VIEW

TYPICAL APPLICATION OF SILT FENCE

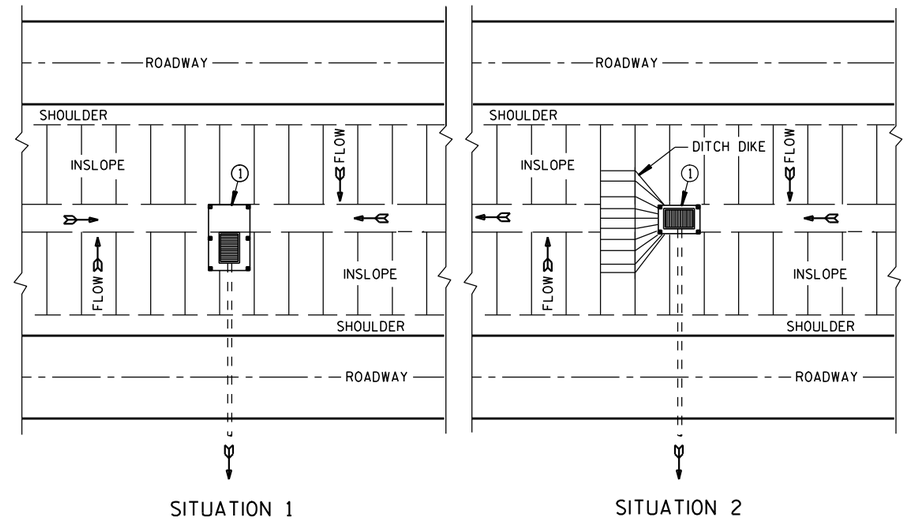

PLAN VIEW

SILT FENCE AT MEDIAN SURFACE DRAINS

GENERAL NOTES

DETAILS OF CONSTRUCTION NOT SHOWN ON THIS DRAWING SHALL CONFORM TO THE PERTINENT REQUIREMENTS OF THE STANDARD SPECIFICATIONS AND APPLICABLE SPECIAL PROVISIONS.

① HORIZONTAL BRACE REQUIRED WITH 2" X 4" WOODEN FRAME OR EQUIVALENT AT TOP OF POSTS.

② FOR MANUAL INSTALLATIONS THE TRENCH SHALL BE A MINIMUM OF 4" WIDE & 6" DEEP TO BURY AND ANCHOR THE GEOTEXTILE FABRIC. FOLD MATERIAL TO FIT TRENCH AND BACKFILL & COMPACT TRENCH WITH EXCAVATED SOIL.

③ WOOD POSTS SHALL BE A MINIMUM SIZE OF 1⅛" X 1⅛" OF OAK OR HICKORY.

④ SILT FENCE TO EXTEND ACROSS THE TOP OF THE PIPE.

⑤ CONSTRUCT SILT FENCE FROM A CONTINUOUS ROLL IF POSSIBLE BY CUTTING LENGTHS TO AVOID JOINTS. IF A JOINT IS NECESSARY USE ONE OF THE FOLLOWING TWO METHODS; A) OVERLAP THE END POSTS AND TWIST, OR ROTATE, AT LEAST 180 DEGREES. B) HOOK THE END OF EACH SILT FENCE LENGTH.

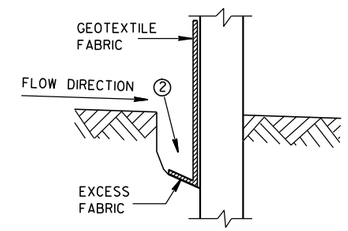

TRENCH DETAIL

NOTE: ADDITIONAL POST DEPTH OR TIE BACKS MAY BE REQUIRED IN UNSTABLE SOILS

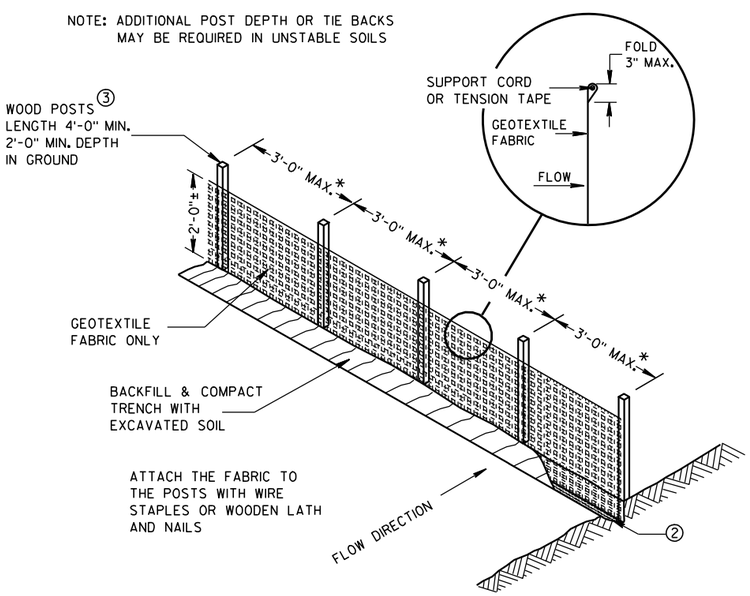

*NOTE: 8'-0" POST SPACING ALLOWED IF A WOVEN GEOTEXTILE FABRIC IS USED.

SILT FENCE

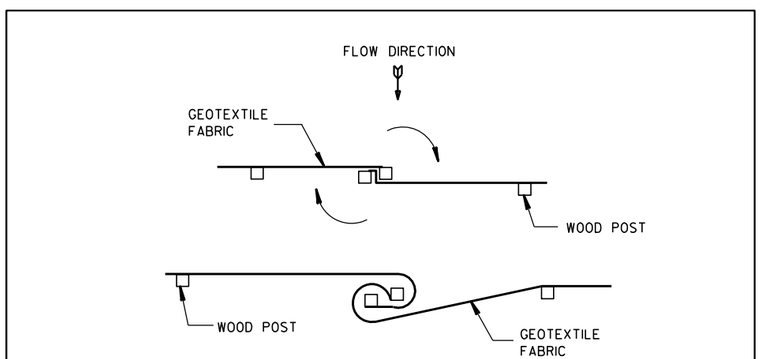

TWIST METHOD

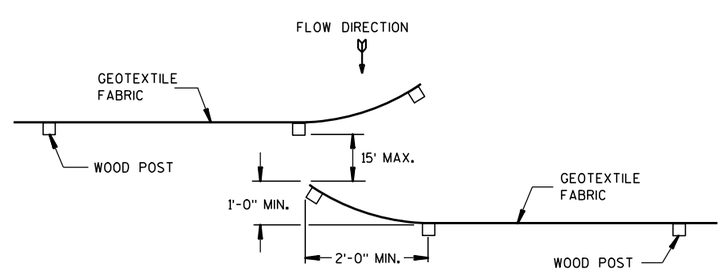

HOOK METHOD

JOINING TWO LENGTHS OF SILT FENCE ⑤

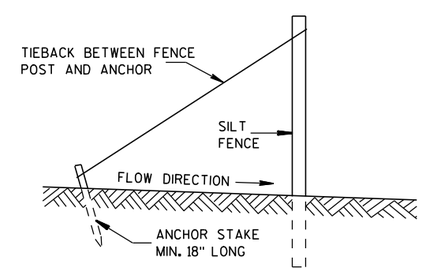

SILT FENCE TIE BACK

(WHEN REQUIRED BY THE ENGINEER)

SILT FENCE
STATE OF WISCONSIN DEPARTMENT OF TRANSPORTATION
APPROVED 4-29-05 /S/ Beth Cann----- DATE CHIEF ROADWAY DEVELOP ENGINEER FHWA

6

6

S.D.D. 8 E 9-6

S.D.D. 8 E 9-6

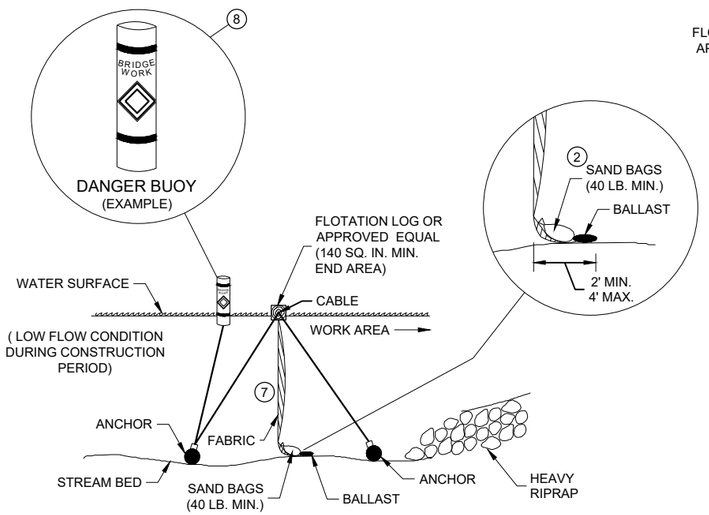

SECTION B - B

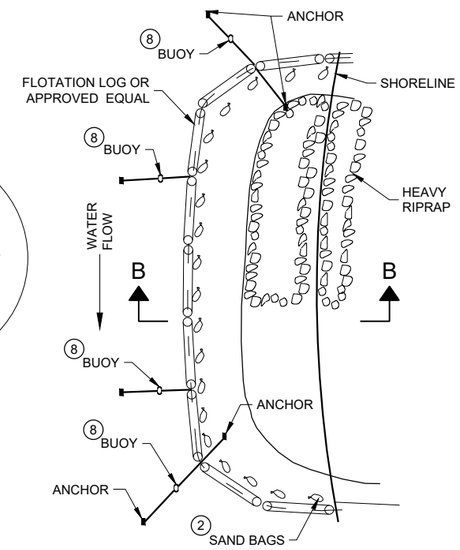

PLAN VIEW

TURBIDITY BARRIER - FLOAT ALTERNATIVE
CAUTION - SEE NOTE 6

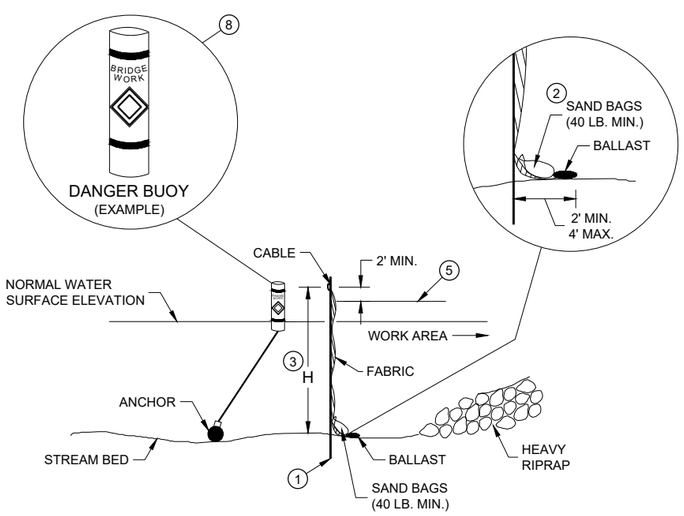

SECTION A - A

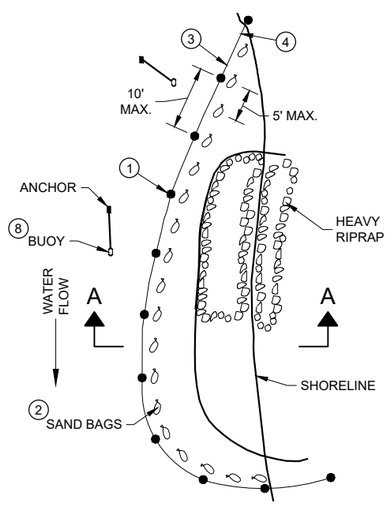

PLAN VIEW

TURBIDITY BARRIER - STANDARD POST INSTALLATION

TURBIDITY BARRIER PLACEMENT DETAILS

GENERAL NOTES

DETAILS OF CONSTRUCTION, MATERIALS AND WORKMANSHIP NOT SHOWN ON THIS DRAWING SHALL CONFORM TO THE PERTINENT REQUIREMENTS OF THE STANDARD SPECIFICATIONS AND THE APPLICABLE SPECIAL PROVISIONS.

TURBIDITY BARRIER MAY BE REMOVED AT THE ENGINEERS DISCRETION, WHEN PERMANENT EROSION CONTROL MEASURES HAVE BEEN ESTABLISHED.

1. DRIVEN STEEL POSTS, PIPES, OR CHANNELS. LENGTH SHALL BE SUFFICIENT TO SECURELY SUPPORT BARRIER AT HIGH WATER ELEVATIONS.
2. SAND BAGS TO BE USED AS ADDITIONAL BALLAST WHEN ORDERED BY THE ENGINEER TO MEET ADVERSE FIELD CONDITIONS. SPACE AS APPROPRIATE FOR SITE CONDITIONS.
3. WHEN BARRIER HEIGHT "H" EXCEEDS 8 FEET, POST SPACING MAY NEED TO BE DECREASED.
4. IN WATERWAYS SUBJECT TO FLUCTUATING WATER ELEVATIONS, PROVISIONS SHOULD BE MADE TO ALLOW THE WATER TO EQUALIZE ON EACH SIDE OF THE BARRIER. THIS MAY BE ACCOMPLISHED BY LEAVING A PORTION OF THE BARRIER OPEN ON THE UPSTREAM END.
5. ESTIMATED HIGH WATER ELEVATION DURING CONSTRUCTION PERIOD. MINIMUM BARRIER HEIGHT SHALL BE 2' GREATER THAN EITHER THE Q2 ELEVATION OR THE ESTIMATED HIGH WATER ELEVATION DURING CONSTRUCTION, WHICHEVER IS GREATER.
6. FLOAT ALTERNATIVE WILL ONLY BE ALLOWED WITH WRITTEN APPROVAL OF THE ENGINEER, AND IS MEANT FOR LOCATIONS WHERE BEDROCK PREVENTS THE INSTALLATION OF POSTS.
7. ALLOW SUFFICIENT SLACK VERTICALLY AND HORIZONTALLY SO THAT SEDIMENT BUILD UP WILL NOT SEPARATE OR LOWER THE TURBIDITY BARRIER.
8. USE AS DIRECTED BY COAST GUARD OR DNR PERMIT WHEN WORKING IN NAVIGABLE WATERWAYS.

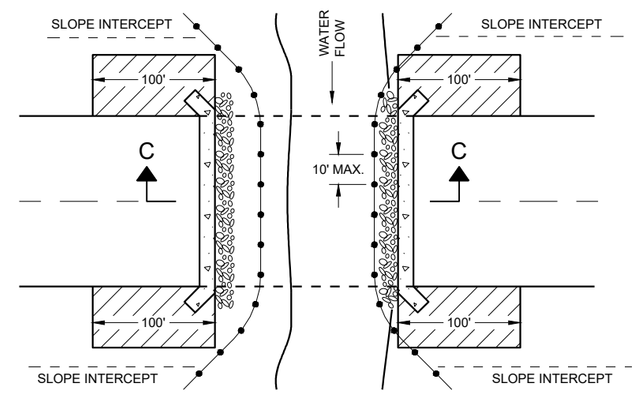

PLAN VIEW

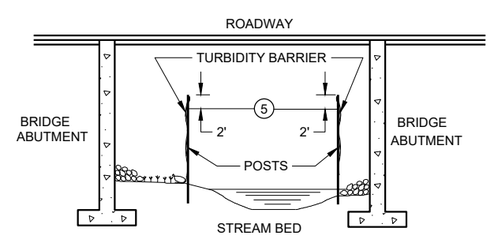

SECTION C - C

TURBIDITY BARRIER DETAIL SHOWING TYPICAL PLACEMENT AT STRUCTURES

TURBIDITY BARRIER

STATE OF WISCONSIN
DEPARTMENT OF TRANSPORTATION

APPROVED
6/4/02 — DATE
/S/ Beth Cannestra — CHIEF ROADWAY DEVELOPMENT ENGINEER
FHWA

6

SDD 08E11 - 02

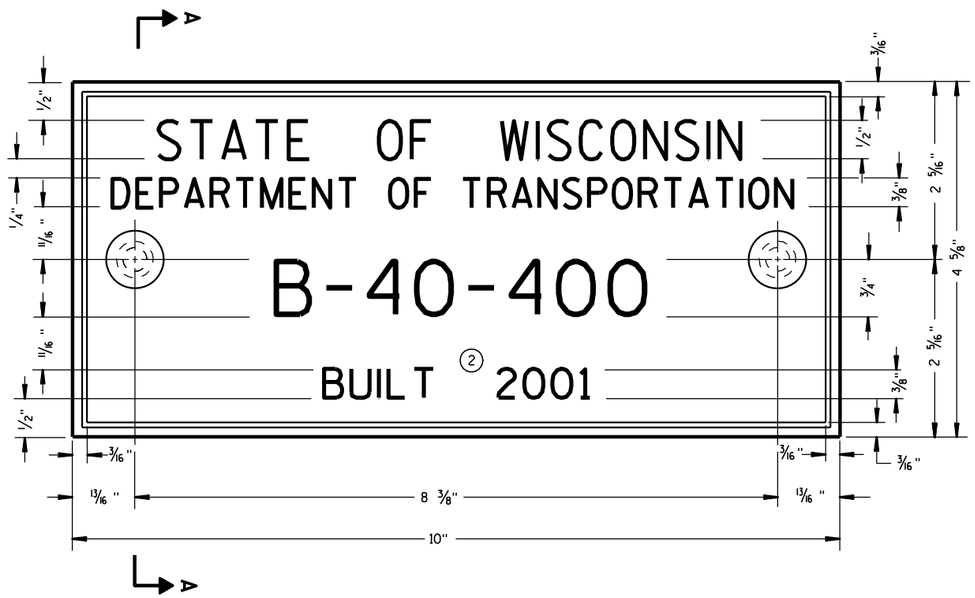

TYPICAL NAME PLATE

(BRIDGES, CULVERTS, AND RETAINING WALLS)

GENERAL NOTES

NAME PLATES TO BE INSTALLED ON BRIDGES, CULVERTS, AND RETAINING WALLS SHALL CONFORM TO THE REQUIREMENTS OF SECTION 502.3.11 OF THE STANDARD SPECIFICATIONS.

THE BRIDGE NUMBER AND YEAR BUILT SHOWN ON THIS DRAWING ARE EXAMPLES ONLY. SEE CONSTRUCTION PLANS FOR INDIVIDUAL NUMBERING AND YEAR BUILT.

① EPOXY RESIN SHALL BE FROM AN APPROVED MANUFACTURER AND USED IN ACCORDANCE WITH MANUFACTURER'S RECOMMENDATIONS.

② REHABILITATION OF AN EXISTING STRUCTURE SHOULD USE THE DATE OF ORIGINAL STRUCTURE CONSTRUCTION.

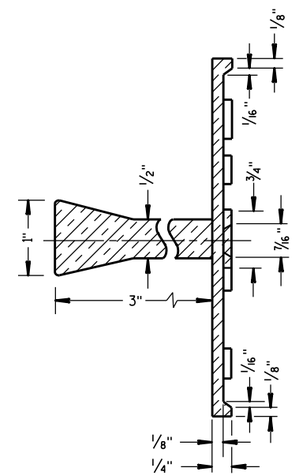

SECTION A-A

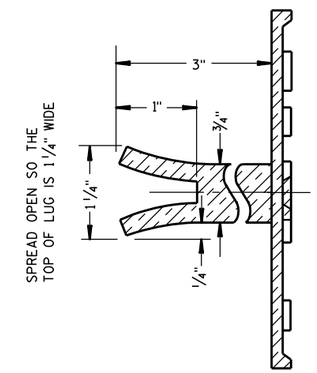

ALTERNATE LUG

6

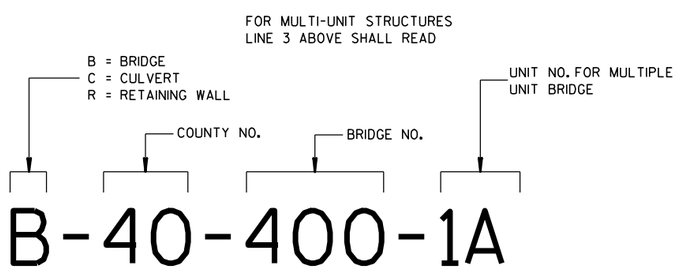

NUMBERING DESIGNATION
MULTI-UNIT STRUCTURES

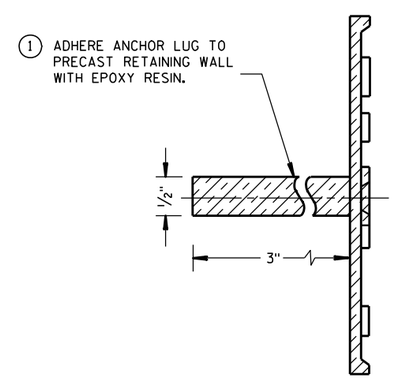

ALTERNATE LUG

(FOR ATTACHMENT TO PRECAST STRUCTURES)

6

NAME PLATE (STRUCTURES)		
STATE OF WISCONSIN DEPARTMENT OF TRANSPORTATION		
APPROVED		
3/26/10 DATE	/S/ Scot Beck-- CHIEF STRUCTURAL DEVELOP	ENGINEER
FHWA		

S.D.D. 12 A 3-10

1. WOOD OR STEEL POSTS (w6X9 OR w6X8.5) MAY BE USED. DO NOT INTERMIX WOOD AND STEEL POSTS. INSTALL STEEL POSTS WITH HOLES ON APPROACHING TRAFFIC SIDE.
2. USE WOOD OR APPROVED PLASTIC BLOCKOUTS. WOOD BLOCKOUTS MAY BE CONSTRUCTED OUT OF TWO OR MORE WOOD BLOCKOUTS. SEE ALTERNATE WOOD BLOCKOUT DETAIL. DIMENSIONS OF APPROVED PLASTIC BLOCKOUTS MAY VARY.
3. IF ROCK IS ENCOUNTERED DURING EXCAVATION, PROVIDE A HOLE 12 INCHES IN DIAMETER EXTENDING 20 INCHES DEEP INTO THE ROCK. PLACE APPROXIMATELY 2 1/2" INCHES OF GRANULAR MATERIAL IN THE BOTTOM OF THE HOLE. CUT THE POSTS THE TO LENGTH AMD INSTALL. BACKFILL WITH EXCAVATED MATERIAL AND COMPACT. BACKFILL IS TO BE FREE OF LARGE ROCKS.
4. WHEN THE DISTANCE FROM BACK OF POST TO SHOULDER HINGE POINT IS LESS THAN 2 FEET INSTALL LONGER POST AT HALF POST SPACING (K).
5. FOR NEW MGS INSTALLATION TOP OF W-BEAM RAIL TOLERANCE IS ±1". FOR EXISTING MGS INSTALLATION TOP OF W-BEAM IS BETWEEN 27 ¾" TO 32".
6. WHEN USING STEEL POST AND WOOD BLOCKOUTS INSTALL FOUR 16D GALVANIZED NAILS. INSTALL NAILS AT THE BACK CORNERS OF THE BLOCK AND BEND THE NAILS OVER THE FLANGE OF THE STEEL POST.
7. TOTAL POST LENGTH FOR TYPE K IS 7' - 0". TOTAL POST LENGTH FOR OTHER MGS TYPES IS 6' - 0".

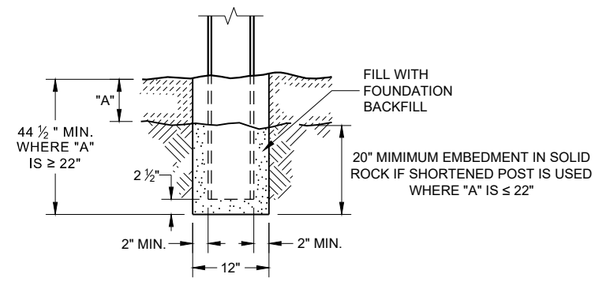

END VIEW
SETTING STEEL OR WOOD POST IN ROCK (3)

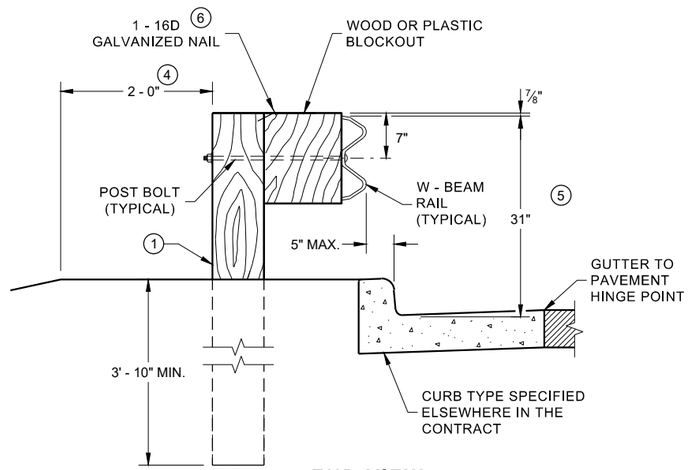

END VIEW
LOCATED ALONG A CURBED ROADWAY

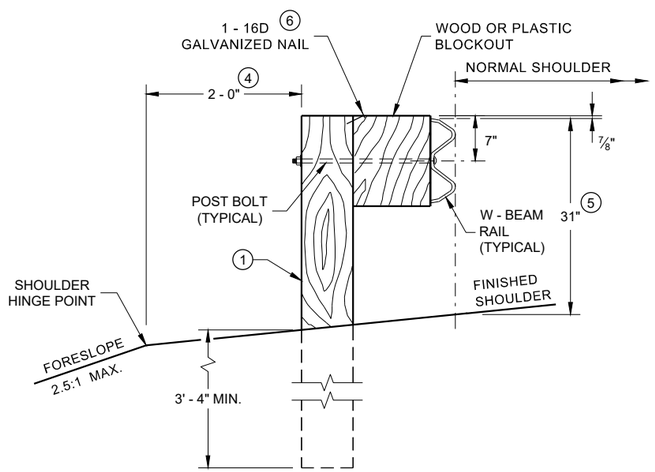

END VIEW
LOCATED ALONG A ROADWAY SHOULDER STANDARD INSTALLATION

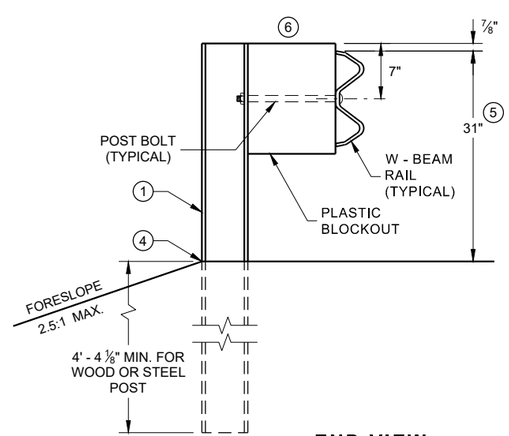

END VIEW
MGS LONGER POST AT HALFPOST SPACING W BEAM (K)

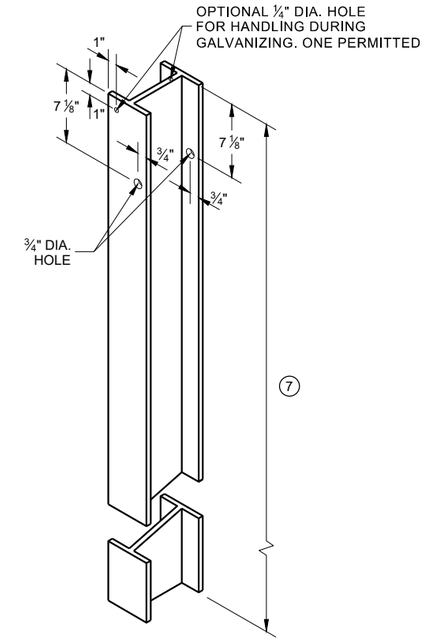

STEEL POST & HOLE PUNCHING DETAIL (W 6 X 9) (1)

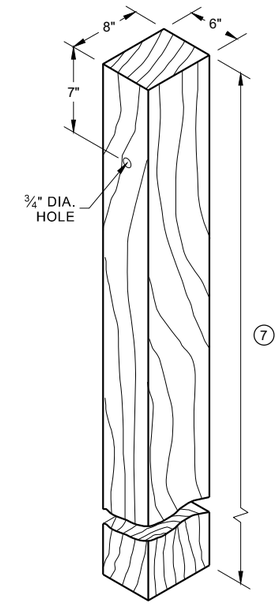

WOOD POST (6" X 8") NOMINAL (1)

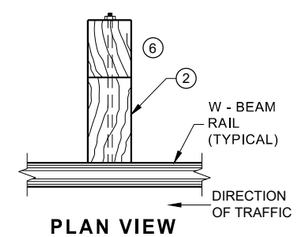

PLAN VIEW WOOD POST, BLOCKOUT & BEAM

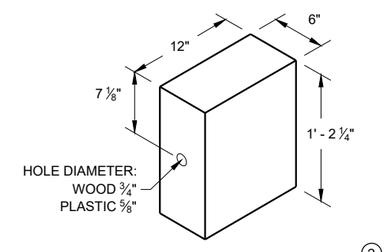

WOOD OR PLASTIC BLOCKOUT (2)

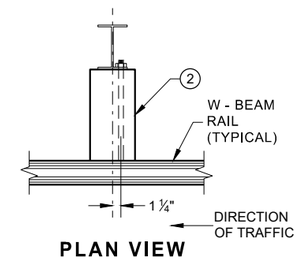

PLAN VIEW STEEL POST, PLASTIC BLOCKOUT & BEAM

MIDWEST GUARDRAIL SYSTEM (MGS) GUARDRAIL

STATE OF WISCONSIN
DEPARTMENT OF TRANSPORTA

6

SDD 14B42 - 07a

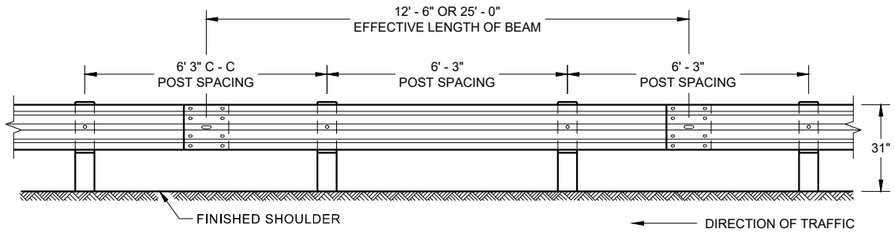

FRONT VIEW
POST SPACING STANDARD INSTALLATION

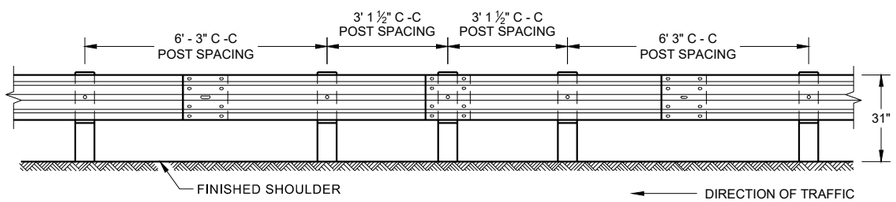

FRONT VIEW
HALF POST SPACING (HS) AND HALF POST SPACING WITH LONGER POSTS (K)

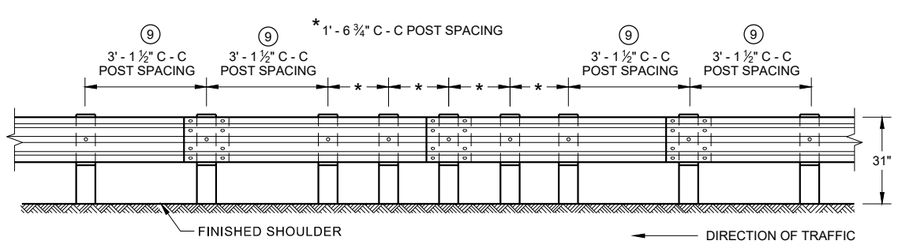

FRONT VIEW
QUARTER POST SPACING (QS)

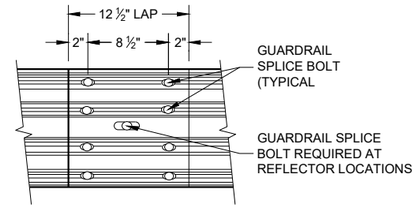

FRONT VIEW
MID-SPAN BEAM SPLICE

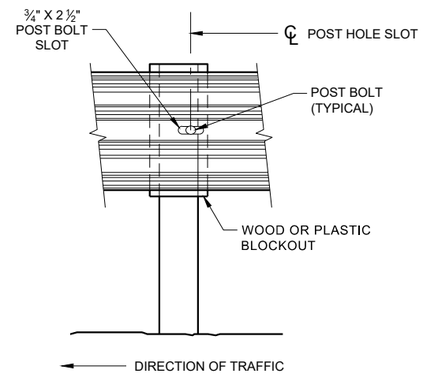

FRONT VIEW AT STEEL POST

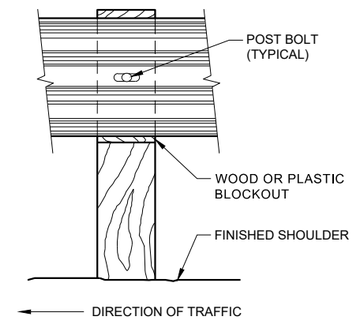

FRONT VIEW AT WOOD POST

GENERAL NOTES

8. DO NOT INSTALL REFLECTORS ON THE FIRST 50 FEET OF THE APPROACH END OF THE ENERGY ABSORBING TERMINAL.

9. 25 FEET OF HALF POST SPACING IS REQUIRED ON APPROACH AND DEPARTURE ENDS OF QUARTER POST SPACING.

POST BOLTS ARE A ⅝" DIAMETER ASTM A307 GUARDRAIL BOLT. A POST BOLT REQUIRES ⅝" DIAMETER A563A DOUBLE RECESSED (DR) HEAVY HEX NUT AND ⅝" DIAMETER F844 FLAT WASHER. POST BOLTS MAY BE LONGER IF MULTIPLE BLOCKOUTS ARE BEING USED.

GUARD RAIL SPLICE BOLTS ARE A ⅝" DIAMETER ASTM A307 GUARDRAIL HEAD BOLT. A GUARDRAIL SPLICE BOLT REQUIRES ⅝" DIAMETER A563A DOUBLE RECESSED (DR) HEAVY HEX NUT.

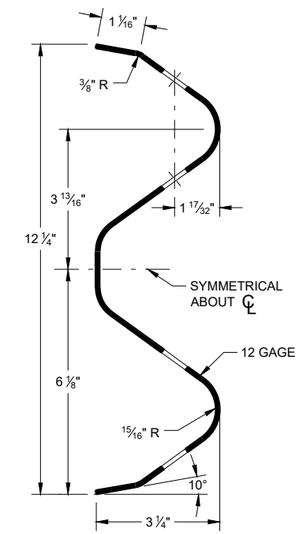

SECTION THRU W-BEAM RAIL

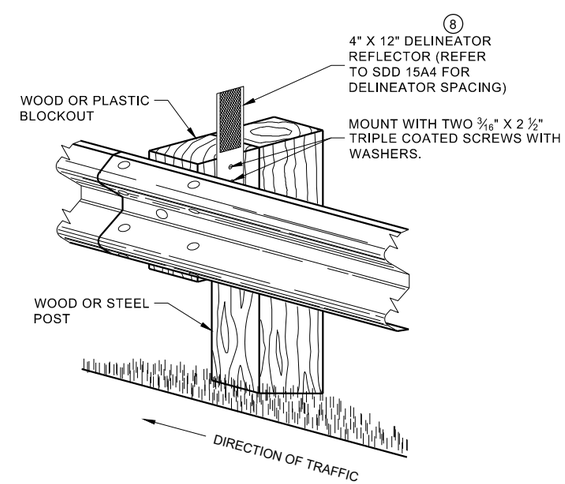

ONE SIDED REFLECTOR DETAIL AND TYPICAL INSTALLATION

MIDWEST GUARDRAIL SYSTEM (MGS) GUARDRAIL

STATE OF WISCONSIN
DEPARTMENT OF TRANSPORTAT

6

SDD 14B42 - 07b

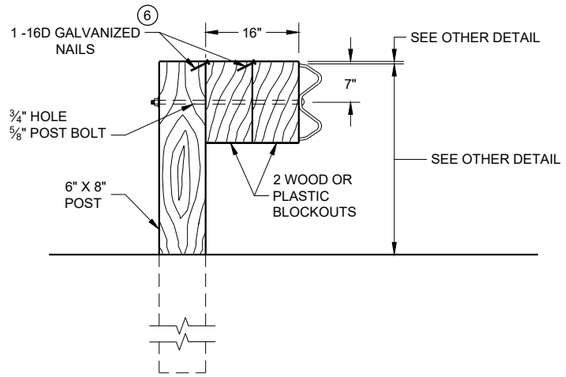

DETAIL FOR 16" BLOCKOUT DEPTH

IT IS ACCEPTABLE TO USE BLOCKOUTS UP TO 16" DEEP TO INCREASE THE POST OFFSET TO AVOID UNDERGROUND OBSTACLES. THERE IS NO LIMIT TO THE NUMBER OF POSTS THAT CAN HAVE ADDITIONAL BLOCKOUTS UP TO 16" DEEP.

NOTE:

1. ALL FILLETS SHALL HAVE A MINIMUM RADIUS OF 3/16".
2. IF THE BOLT EXTENDS MORE THAN ¼" FROM THE NUT THE BOLT SHOULD BE TRIMMED BACK.

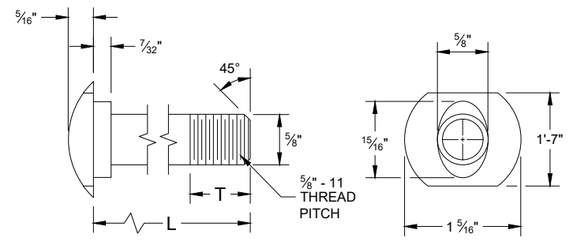

POST BOLT TABLE

L	T (MIN.)
1 ¼"	1 ⅛"
2"	1 ¾"
10"	4"
14"	4 1/16"
18"	4"
21"	4 1/16"
25"	4"

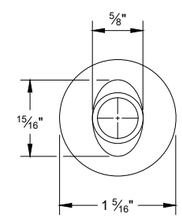

ALTERNATE BOLT HEAD

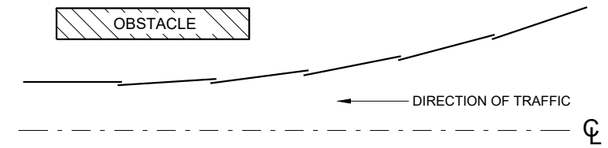

PLAN VIEW
BEAM LAPPING DETAIL

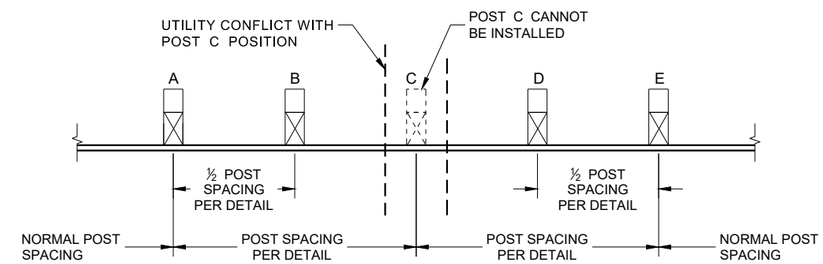

POST DRIVING FOR CONTINUOUS UNDERGROUND OBSTRUCTION

6

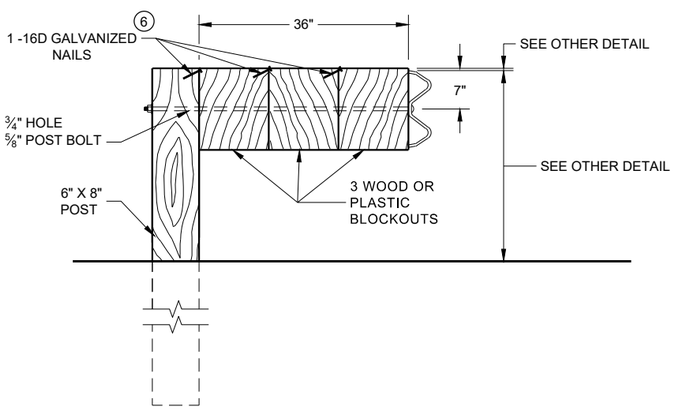

DETAIL FOR 36" BLOCKOUT DEPTH

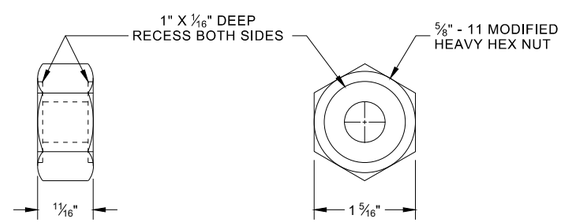

POST BOLT, SPLICE BOLT AND RECESS NUT

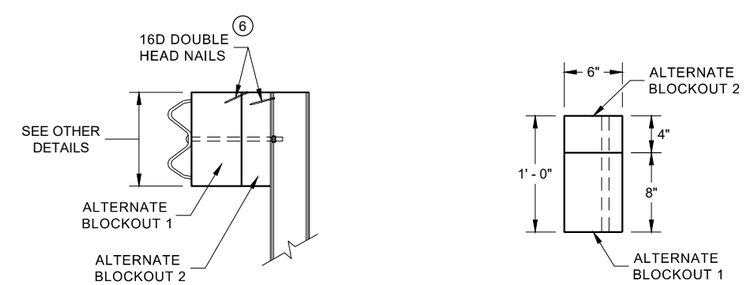

SIDE VIEW

PLAN VIEW

ALTERNATE WOOD BLOCKOUT DETAIL

NOTES: UNDER SPECIAL CIRCUMSTANCES, SUCH AS AVOIDING OBSTACLES THAT ARE NOT RELOCATED, IT IS ACCEPTABLE TO INSTALL ADDITIONAL BLOCKOUTS TO OBTAIN UP TO 36" DEPTH FOR ONE OR TWO POSTS IN A SECTION OF GUARDRAIL.

DO NOT USE 16" OR 36" BLOCKOUTS IF IT CAUSES THE POST TO BE DRIVEN BEYOND SHOULDER HINGE POINT OR CAUSES A FIXED OBJECT TO BE WITHIN THE DEFLECTION DISTANCE OF THE BARRIER.

(6) WHEN USING STEEL POST AD WOOD BLOCKOUTS, INSTALL FOUR 16D GALVANIZED NAILS. INSTALL NAILS AT THE BACK CORNERS OF THE BLOCK AND BEND THE NAILS OVER THE FLANGE OF THE STEEL POST.

MIDWEST GUARDRAIL SYSTEM (MGS) GUARDRAIL

STATE OF WISCONSIN
DEPARTMENT OF TRANSPORTA

SDD 14B42 - 07c

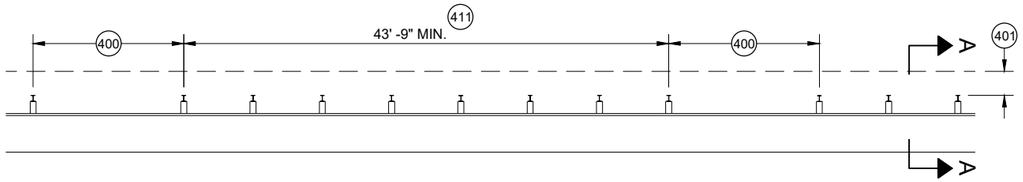

MISSING POST IN MGS GUARDRAIL

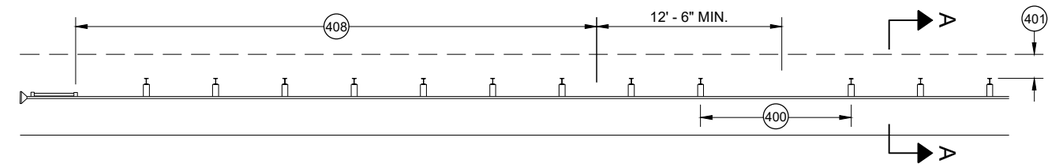

MISSING POST IN MGS GUARDRAIL NEAR EAT

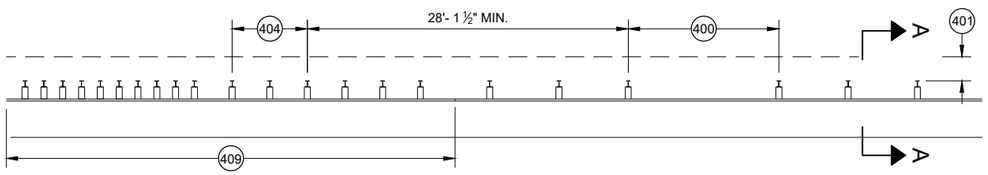

MISSING POST IN MGS GUARDRAIL NEAR AN APPROACH TRANSITION

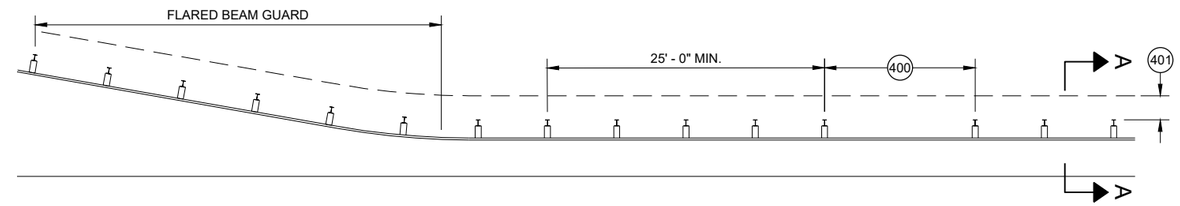

MISSING POST IN MGS GUARDRAIL NEAR FLARED BEAM GUARD

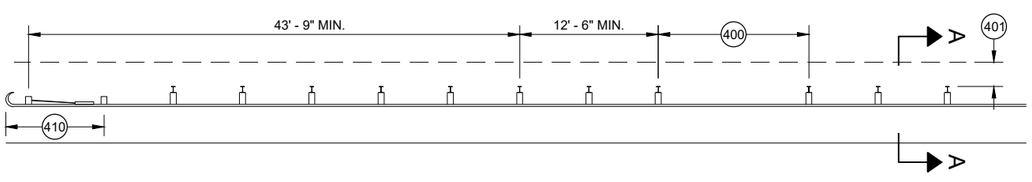

MISSING POST IN MGS GUARDRAIL NEAR A TYPE 2 END TERMINAL

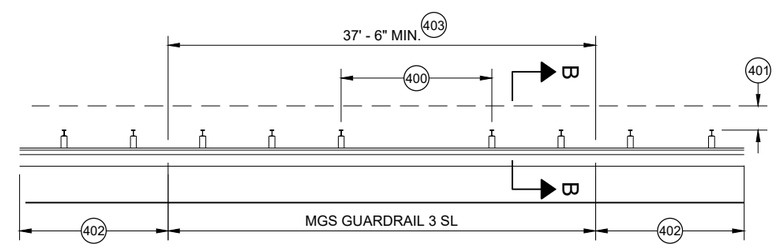

MISSING POST IN SHORT SPAN MGS GUARDRAIL NEAR CURB (SL) 407

400 MAX SPAN 12' - 6"
401 2' MIN.
402 MGS GUARDRAIL 3
403 NESTING BEAM GUARD
404 ASYMMETRIC TRANSITION
405 SOIL WELL DRAINED AND COMPACTED
406 SEE OTHER DRAWINGS IN THIS SDD
407 SEE OTHER DRAWINGS FOR MIN. SPACING BETWEEN SPANS
408 SEE SDD 14B44
409 SEE SDD 14B45
410 SEE SDD 14B47
411 MINIMUM DISTANCE BETWEEN MISSING POST SPANS.

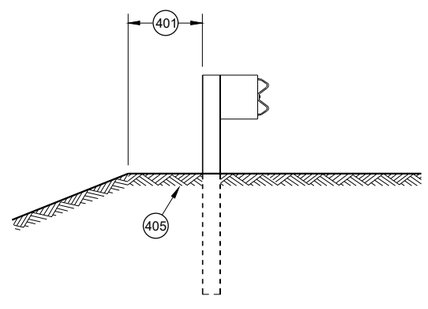

SECTION A - A 406

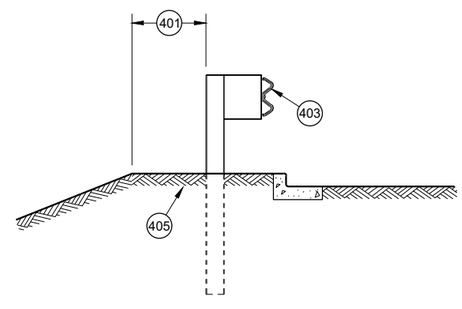

SECTION B - B 406

MIDWEST GUARDRAIL SYSTEM (MGS) GUARDRAIL

STATE OF WISCONSIN
DEPARTMENT OF TRANSPORTATION

APPROVED
May 2021 — DATE
/S/ Rodney Taylor — ROADWAY STANDARDS DEVE UNIT SUPERVISOR
FHWA

6

SDD 14B42 - 07d

GENERAL NOTES

(A) THE SLOPE IN THE AREA BOUNDED BY THE GRADELINE, THE HINGE POINT LINE (HPL) AND THE CLEAR ZONE LIMITS (CZL) SHALL BE 4:1 OR FLATTER.

(B) AFTER FINAL ASSEMBLY, RECHECK CABLE TO BE SURE IT IS TAUT AND HAS NOT RELAXED

(C) DIFFERENT MANUFACTURERS REQUIRE DIFFERENT PERFORATED W - BEAM RAIL END PANELS. SEE MANUFACTURER'S INFORMATION.

(D) ATTACH ALUMINUM SHEET TO E.A.T. HEAD USING 4 STAINLESS STEEL SELF - TAPPING SCREWS. ONE SCREW PER CORNER.

(E) HARDWARE MAY VARY BETWEEN MANUFACTURER. SEE MANUFACTURER'S DRAWING FOR INFORMATION.

DIMENSIONS MAY VARY, MANUFACTURER'S INFORMATION.

SEE SDD 14B42 FOR MORE INFORMATION.

* DO NOT ATTACH BLOCKOUTS TO POST 1 AND 2.

DO NOT INSTALL REFLECTORS ON THE FIRST 50 FEET OF THE APPROACH END OF THE ENERGY ABSORBING TERMINAL.

SEE MANUFACTURER'S DRAWING FOR SPLICE LOCATION, HARDWARE DIMENSIONS AND INSTALLATION INSTRUCTIONS.

THE CENTER OF THE UPPER 3 ½" DIAMETER HOLE ON POST NUMBER 3 THROUGH POST 9 IS TO BE FLUSH WITH THE GROUND LINE UP TO A MAXIMUM OF 2" ABOVE GROUND LINE. WOOD BLOCKS ON POSTS NUMBERED 3 THROUGH 9 MAY BE ADJUSTED UP TO 3" ABOVE THE TOP OF POST.

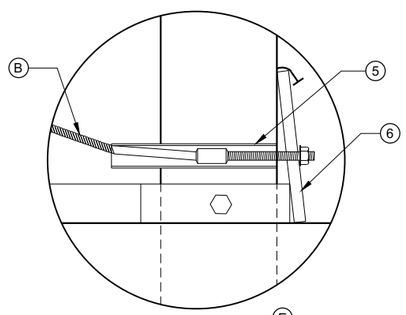

DETAIL "A" (E)

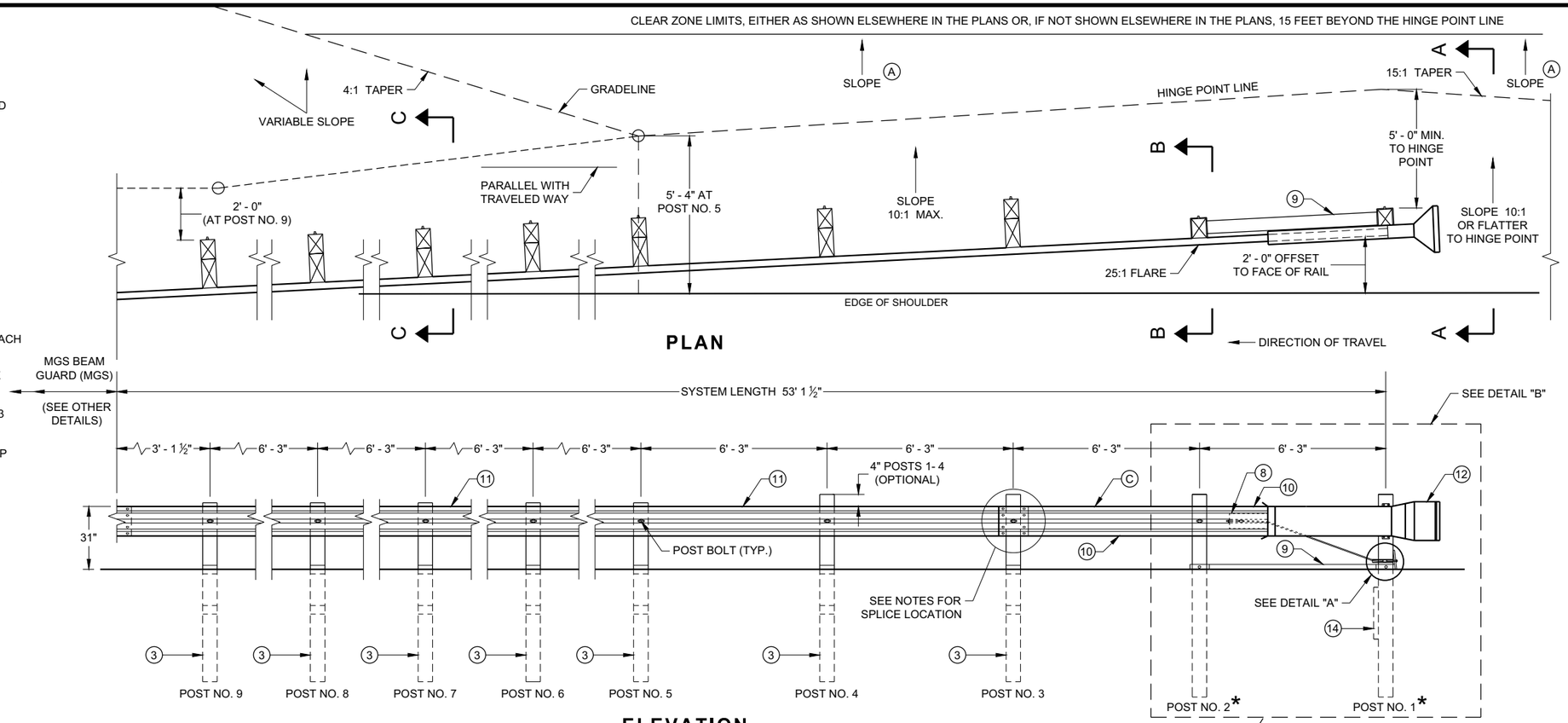

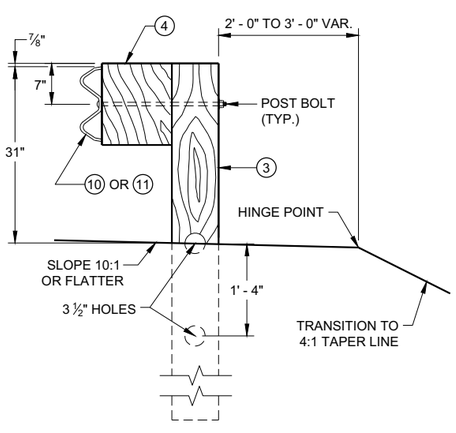

SECTION C - C
TYPICAL AT POST NOS. 3 - 9

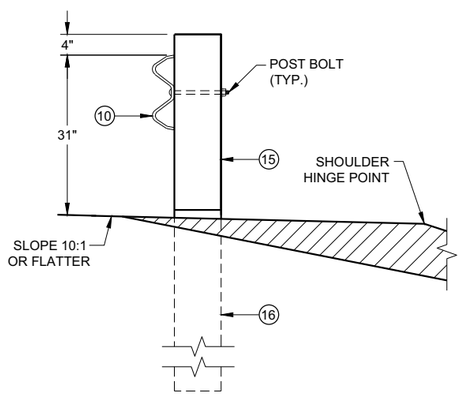

SECTION B - B
TYPICAL AT POST NO. 2*

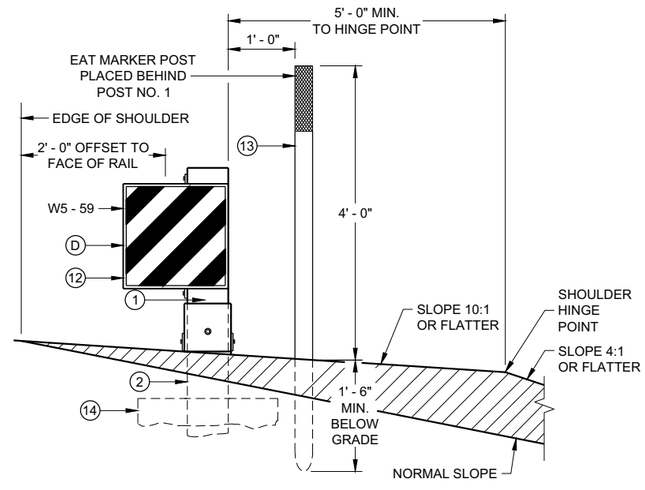

SECTION A - A
TYPICAL AT POST NO. 1*

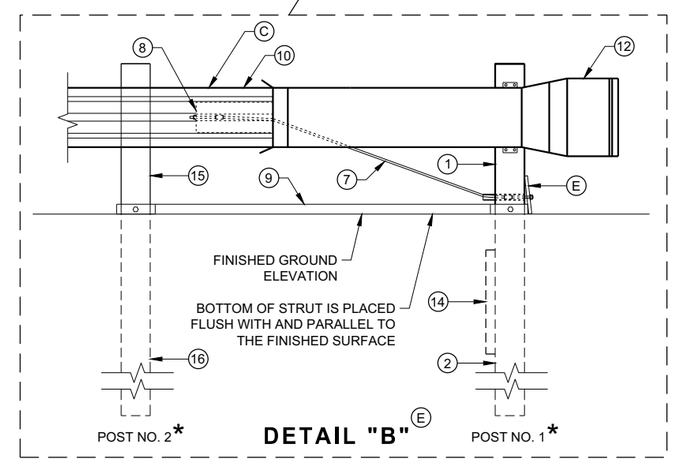

DETAIL "B" (E)

MIDWEST GUARDRAIL SYSTEM ENERGY ABSORBING TERMINAL (MGS)

STATE OF WISCONSIN
DEPARTMENT OF TRANSPORTATION

6

SDD 14B44 - 04a

BILL OF MATERIALS

PART NO.	DESCRIPTION MATERIALS PROVIDED BY MGS EAT MANUFACTURER. SEE MANUGACTURER'S DETAILS FOR MORE INFORMATION.
1	UPPER POST NO. 1 6" X 6" TUBE
2	LOWER POST NO. 1
3	WOOD CRT
4	WOOD BLOCKOUT
5	PIPE SLEEVE
6	BEARING PLATE
7	BCT CABLE ASSEMBLY
8	ANCHOR CABLE BOX
9	GROUND STRUT
10	PERFORATED W-BEAM RAIL END PANEL, 12'-6" LONG.
11	STANDARD W-BEAM RAIL. MULTIPLE SECTIONS REQUIRED. SECTIONS VARY IN LENGTH.
12	IMPACT HEAD
13	EAT MARKER POST - YELLOW (SEE APPROVED PRODUCTS LIST)
14	SOIL PLATE
15	UPPER POST NO. 2
16	LOWER POST NO. 2

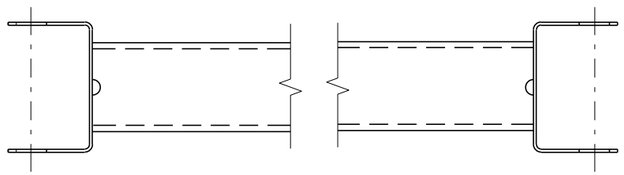

GENERIC GROUND STRUT 9 E

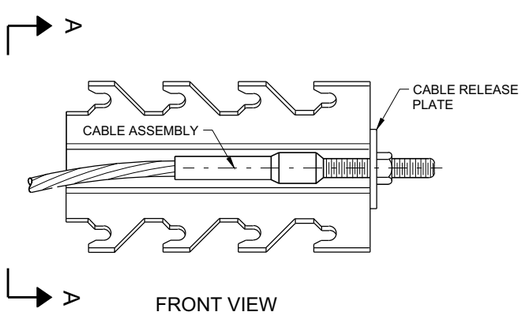

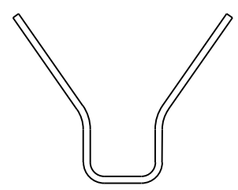

SECTION A - A

GENERIC ANCHOR CABLE BOX 9 E

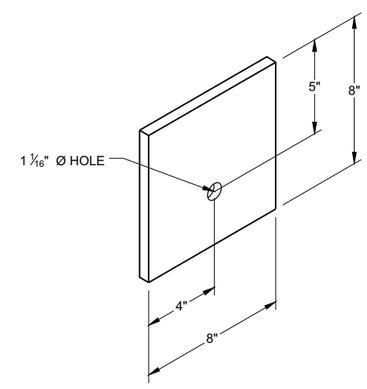

BEARING PLATE 6 E

6

6

SDD 14B44 - 04b

SDD 14B44 - 04b

MIDWEST GUARDRAIL SYSTEM ENERGY ABSORBING TERMINAL (MGS)

STATE OF WISCONSIN
DEPARTMENT OF TRANSPORTAT

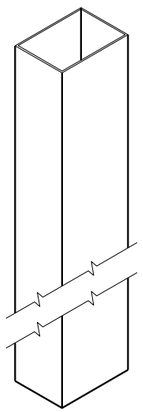

UPPER POST NO. 1 (1) (E)

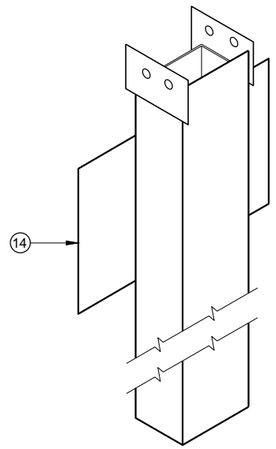

LOWER POST NO. 1 (2) (E)

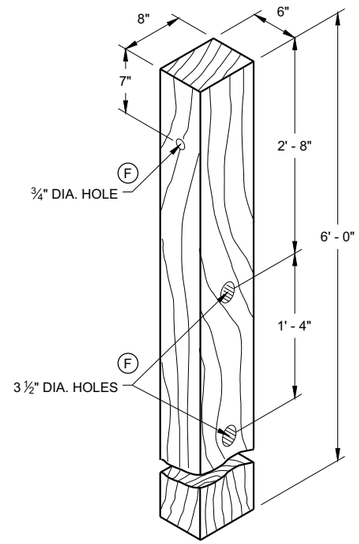

WOOD CRT POST (3) (E)

POSTS NUMBER 3-9

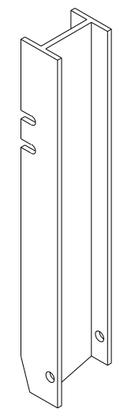

UPPER POST NO. 2 (15) (E)

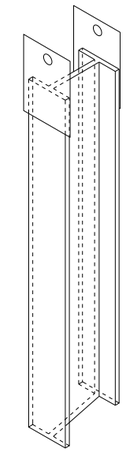

LOWER POST NO. 2 (16) (E)

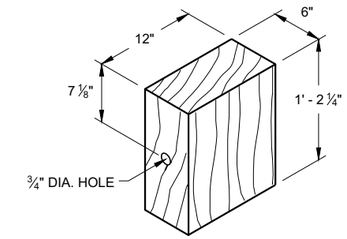

WOOD BLOCKOUT (4)

REQ'D. AT ALL POSTS EXCEPT POST NO'S 1 & 2

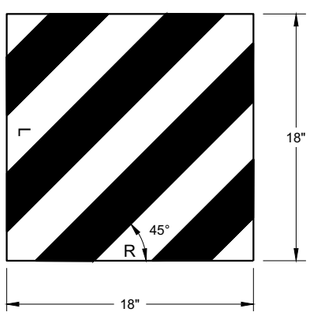

W5 - 59

REFLECTIVE SHEETING DETAIL (E)

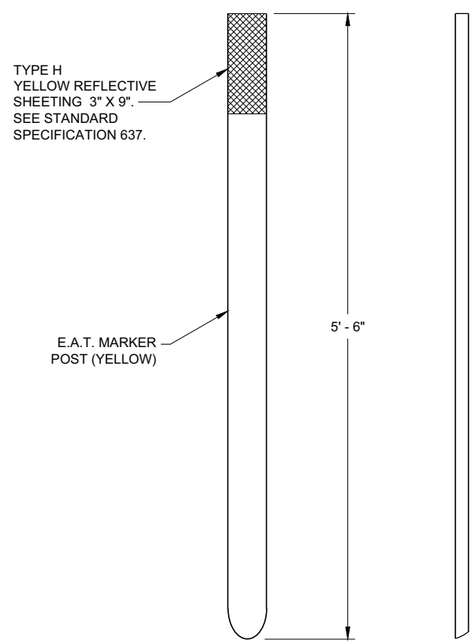

FRONT VIEW SIDE VIEW

E.A.T. MARKER POST (13)

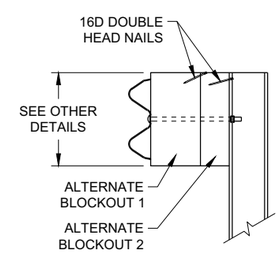

SIDE VIEW

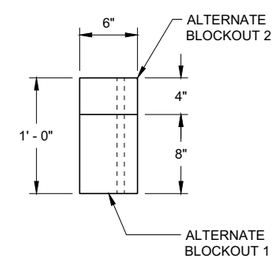

TOP VIEW

ALTERNATE WOOD BLOCKOUT DETAIL

MIDWEST GUARDRAIL SYSTEM ENERGY ABSORBING TERMINAL (MGS)

STATE OF WISCONSIN
DEPARTMENT OF TRANSPORTATION

APPROVED
7/2018 — DATE
/S/ Rodney Taylor — ROADWAY STANDARDS DEVE UNIT SUPERVISOR
FHWA

6

6

SDD 14B44 - 04c

SDD 14B44 - 04c

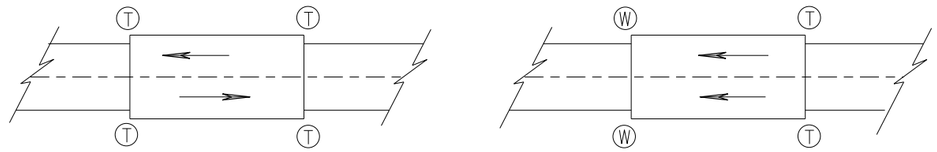

TWO WAY TRAFFIC **ONE WAY TRAFFIC**

(T) THRIE BEAM CONNECTION

(W) W-BEAM CONNECTION WHEN REQUIRED

TYPICAL LOCATIONS OF THRIE BEAM AND W-BEAM CONNECTIONS TO BRIDGE

GENERAL NOTES

IF ROCK IS ENCOUNTERED, REMOVE ROCK TO FULL DEPTH OF POST PLUS 2½", AND 12" DIAMETER AROUND POST. SEE 14B42 FOR MORE DETAILS.

TRANSITION USES STEEL POSTS ONLY.

SEE STANDARD DETAIL DRAWING 14 B 42 FOR MORE INFORMATION.

POST 2 THROUGH 17 USES STEEL POST ONLY

(1) BRIDGE RAILING TYPE "W" DOES NOT REQUIRE A TERMINAL CONNECTOR.

(2) OPTIONAL CURB AND GUTTER OR DRAINAGE FEATURE SEE PLAN FOR INFORMATION.

(13) STEEL OR WOOD POST IS ACCEPTABLE AT POST 1. SEE SDD14B42

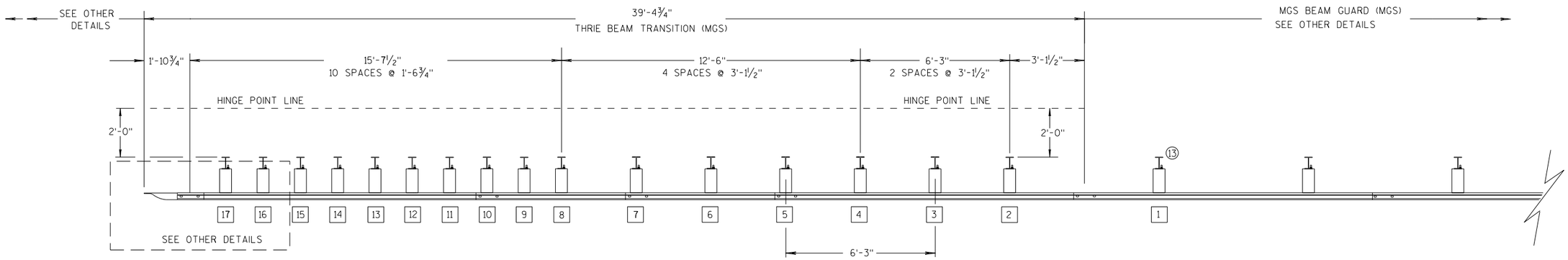

PLAN VIEW

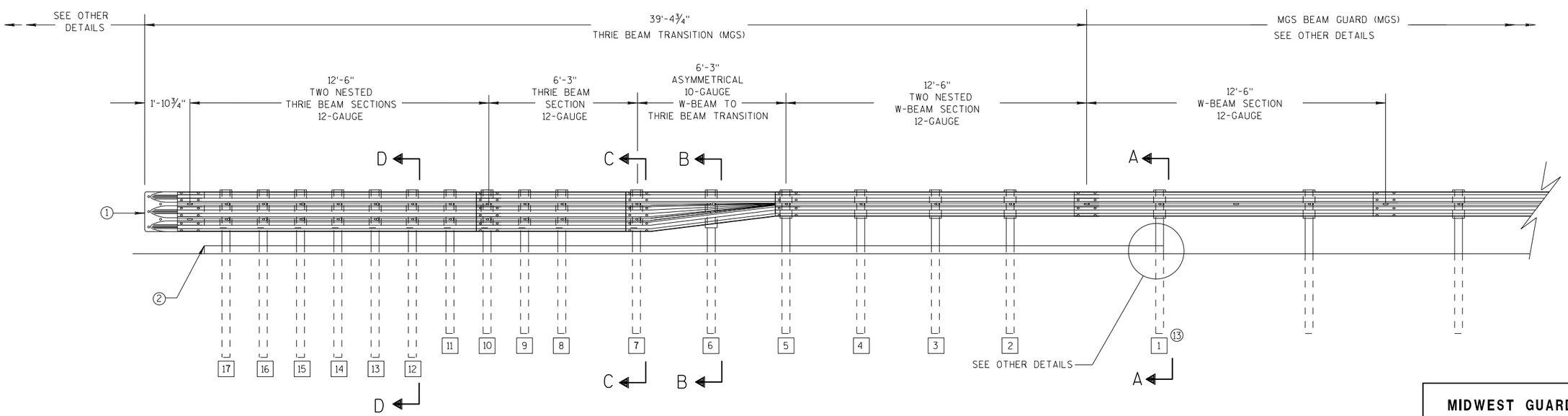

ELEVATION VIEW

MIDWEST GUARDRAIL SYSTEM THRIE BEAM TRANSITION

MIDWEST GUARDRAIL SYSTEM THRIE BEAM TRANSITION (MGS)

STATE OF WISCONSIN
DEPARTMENT OF TRANSPOR

6

S.D.D. 14 B 45-5a

GENERAL NOTES

(2) OPTIONAL CURB AND GUTTER OR DRAINAGE FEATURE SEE PLAN FOR INFORMATION.

(3) WHEN USING STEEL POSTS AND WOOD BLOCKOUTS INSTALL FOUR 10D GALVANIZED NAILS. INSTALL NAILS AT THE BACK CORNERS OF THE BLOCK AND BEND THE NAILS OVER THE FLANGE OF THE STEEL POST.

(4) TOLERANCE FOR TOP OF W-BEAM RAIL IS ± 1".

(13) STEEL OR WOOD POST IS ACCEPTABLE AT POST 1. SEE SDD 14B42

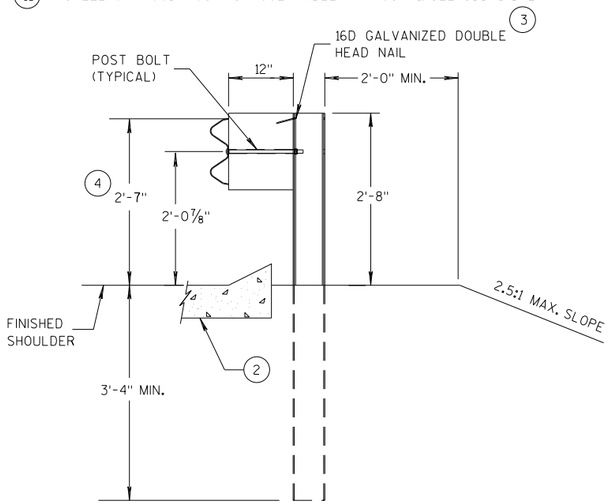

SECTION A-A (13)

POSTS 1-5

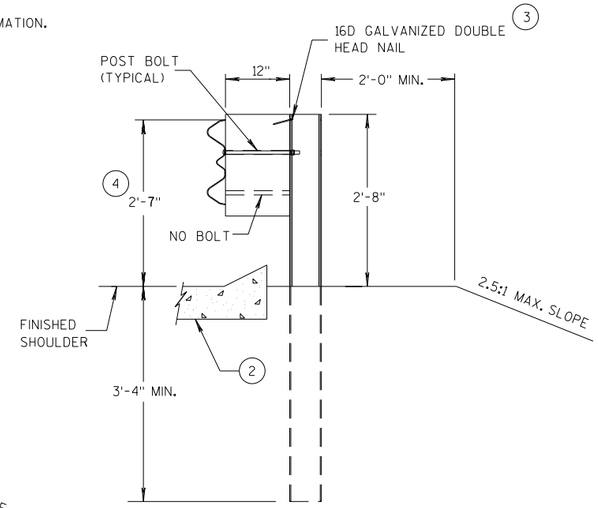

SECTION B-B

POST 6

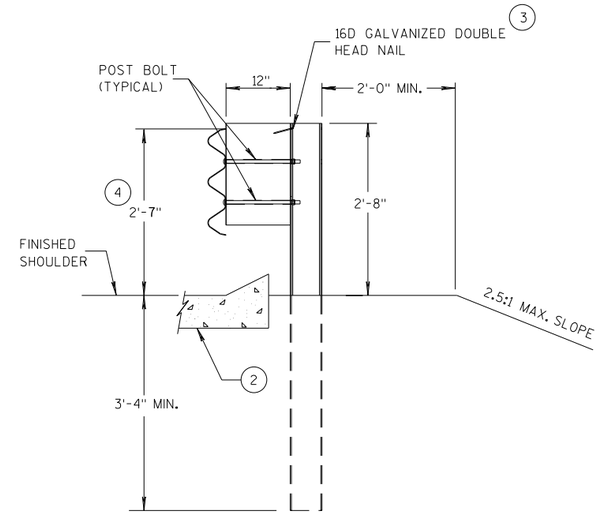

SECTION C-C

POSTS 7-11

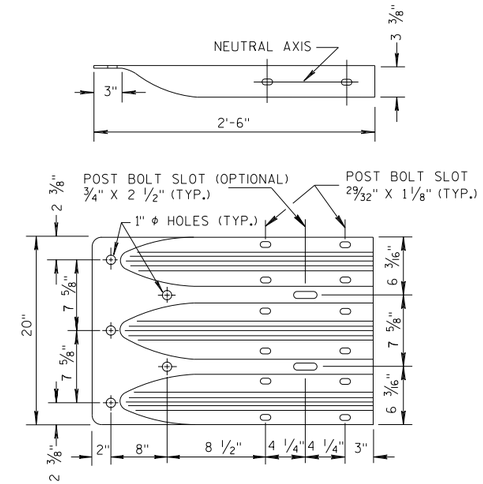

THRIE BEAM TERMINAL CONNECTOR

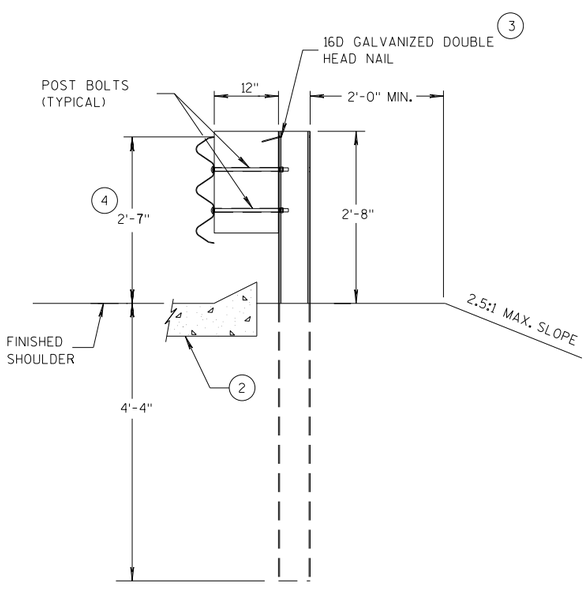

SECTION D-D

POSTS 12-17

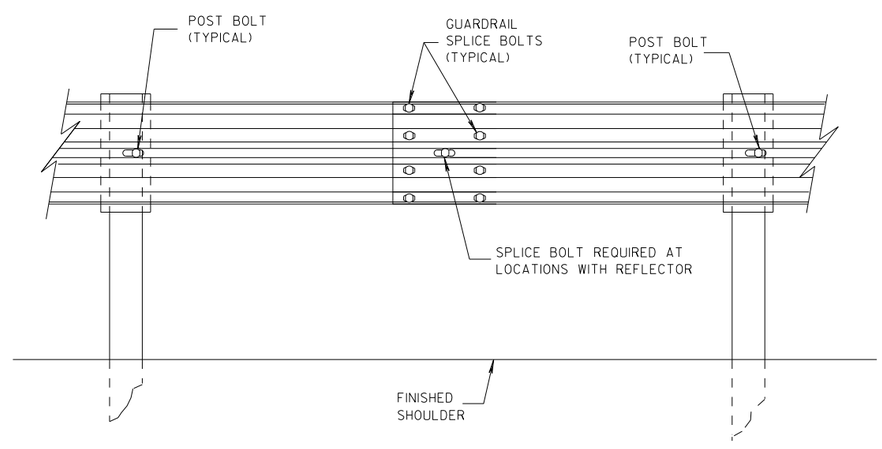

SPLICE DETAIL

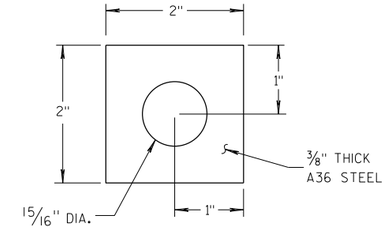

PLATE WASHER DETAIL

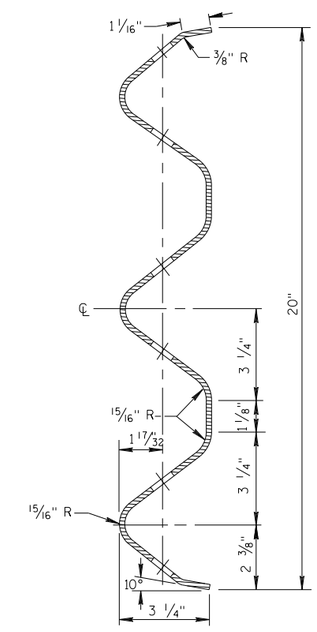

SECTION THRU THRIE BEAM RAIL ELEMENT

MIDWEST GUARDRAIL SYSTEM
THRIE BEAM TRANSITION (MGS)

STATE OF WISCONSIN
DEPARTMENT OF TRANSPORT

6

S.D.D. 14 B 45-5b

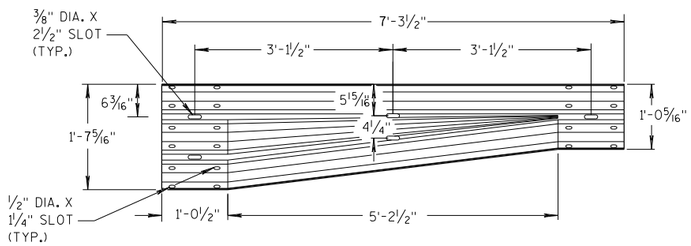

W-BEAM TO THRIE BEAM TRANSITION SECTION

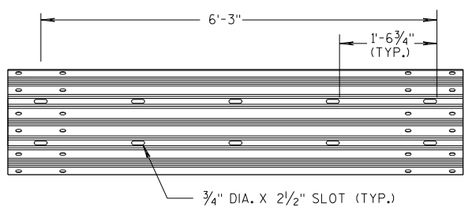

6'-3" THRIE BEAM SECTION

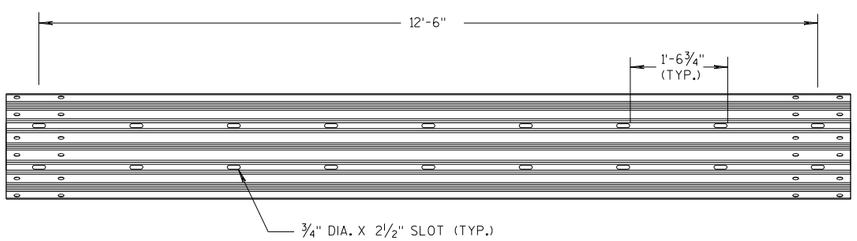

12'-6" THRIE BEAM SECTION

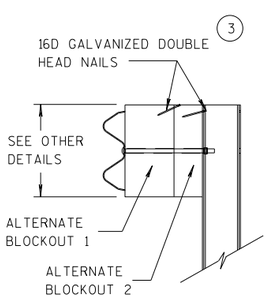

SIDE VIEW

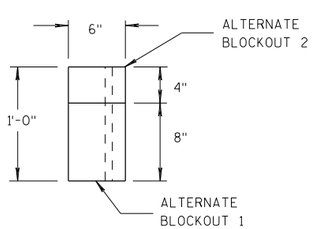

TOP VIEW

ALTERNATE WOOD BLOCKOUT DETAIL

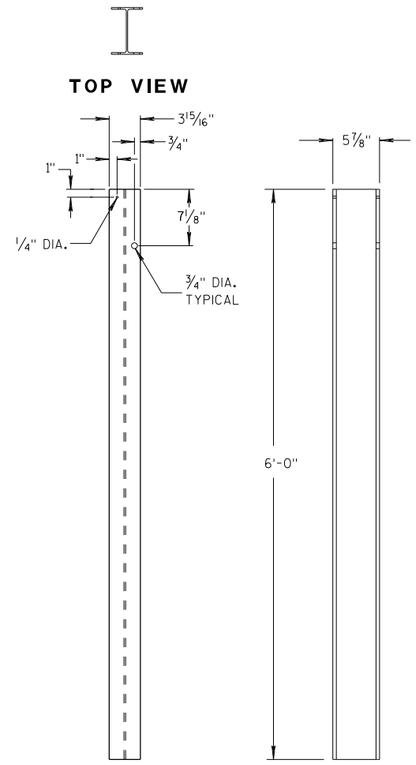

STEEL POSTS 1-5 (13)

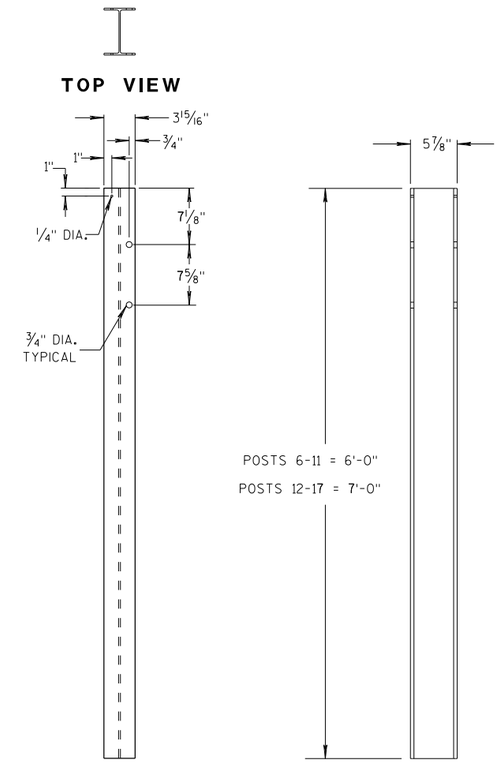

STEEL POSTS 6-17

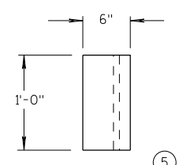

TOP VIEW (5)

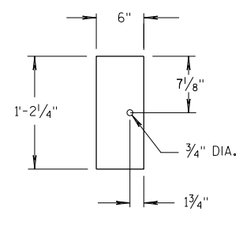

FRONT VIEW

BLOCKOUT POSTS 1-5

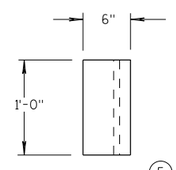

TOP VIEW (5)

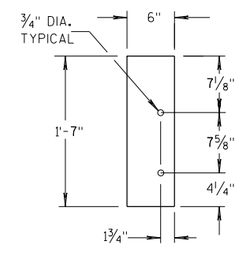

FRONT VIEW

BLOCKOUT POSTS 6-17

GENERAL NOTES

STEEL POSTS ARE W6X9 OR W6X8.5.

BOLT HOLES FOR POST ARE ON FRONT AND OF SIDE OF POST.

(3) WHEN USING STEEL POSTS AND WOOD BLOCKOUTS INSTALL FOUR 16D GALVANIZED NAILS. INSTALL NAILS AT THE BACK CORNERS OF THE BLOCK AND BEND THE NAILS OVER THE FLANGE OF THE STEEL POST.

(5) WOOD BLOCKS MAY BE CONSTRUCTED OUT OF 2 WOOD BLOCKS. SEE ALTERNATE WOOD BLOCK DETAIL.

(13) STEEL OR WOOD POST IS ACCEPTABLE AT POST 1. SEE SDD 14B42.

MIDWEST GUARDRAIL SYSTEM THRIE BEAM TRANSITION (MGS)

STATE OF WISCONSIN
DEPARTMENT OF TRANSPOR

6

S.D.D. 14 B 45-5c

GENERAL NOTES

(4) TOLERANCE FOR TOP OF W-BEAM RAIL IS ± 1".

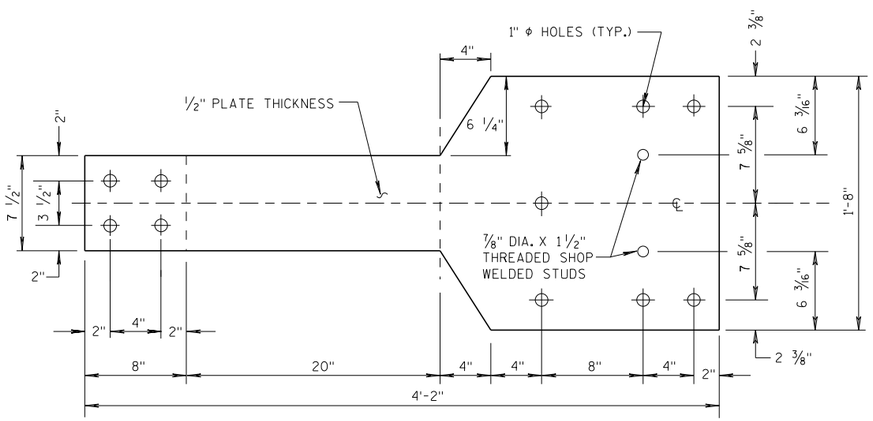

FRONT VIEW

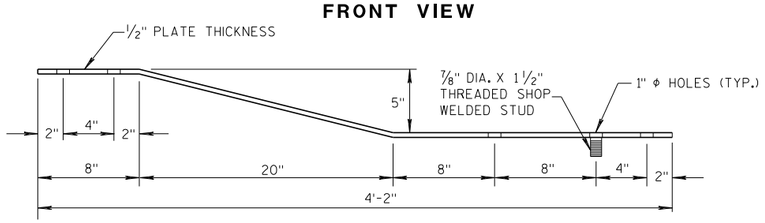

PLAN VIEW

BACK-UP PLATE DETAIL, TYPE "M"

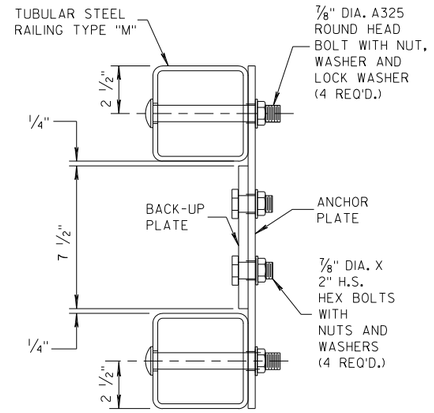

SECTION L-L

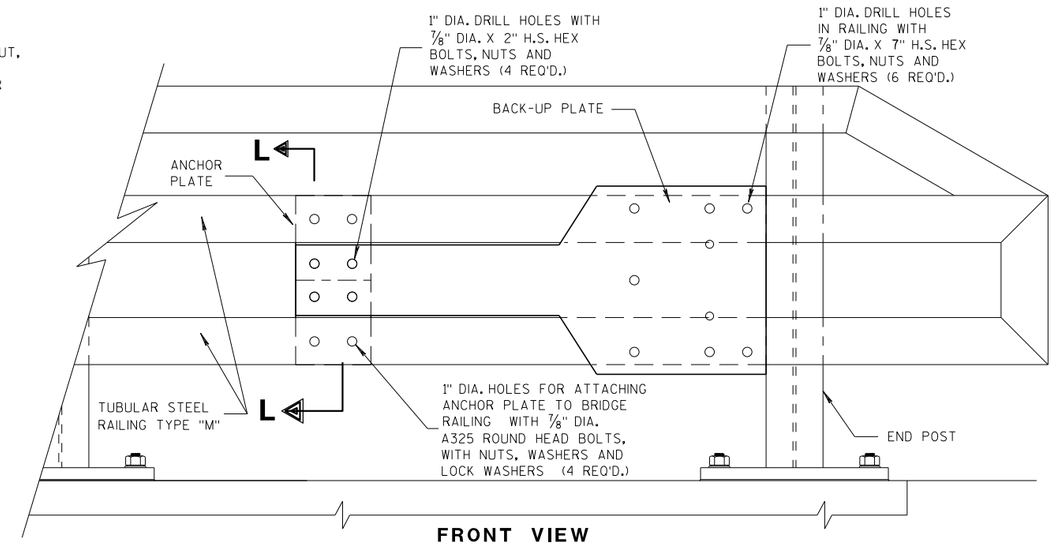

FRONT VIEW

ANCHOR AND BACK-UP PLATE MOUNTING TO BRIDGE RAILING, TYPE "M"

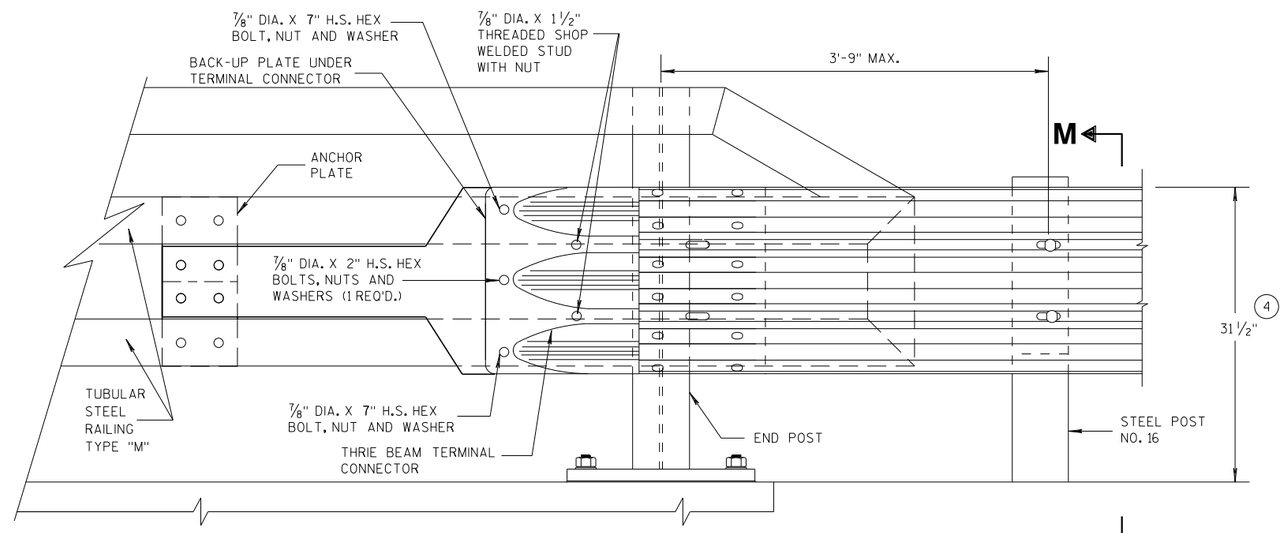

FRONT VIEW

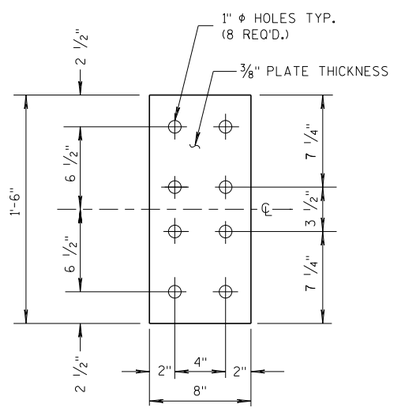

FRONT VIEW

ANCHOR PLATE DETAIL, TYPE "M"

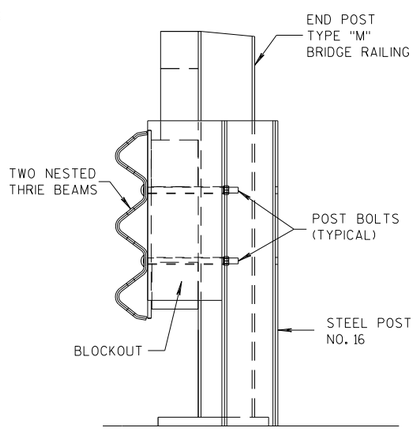

SECTION M-M

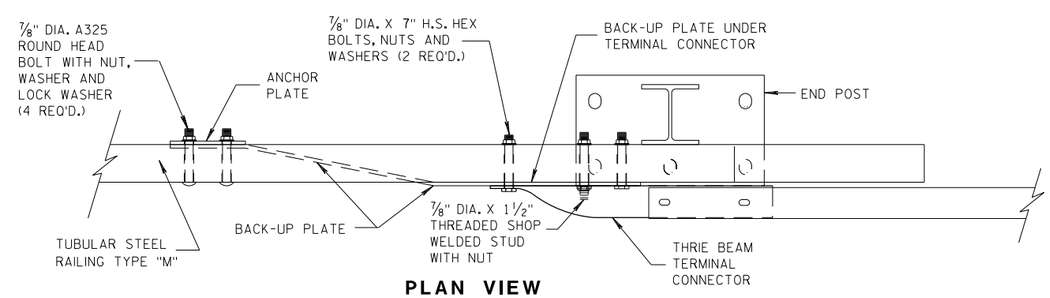

PLAN VIEW

THRIE BEAM CONNECTION TO TUBULAR RAILING, TYPE "M"

MIDWEST GUARDRAIL SYSTEM THRIE BEAM TRANSITION (MGS)

STATE OF WISCONSIN
DEPARTMENT OF TRANSPORTATION

APPROVED
07/2018 — DATE
/S/ Rodney Taylor — ROADWAY STANDARDS DEVELOPMENT UNIT SUPERVISOR
FHWA

6

S.D.D. 14 B 45-5h

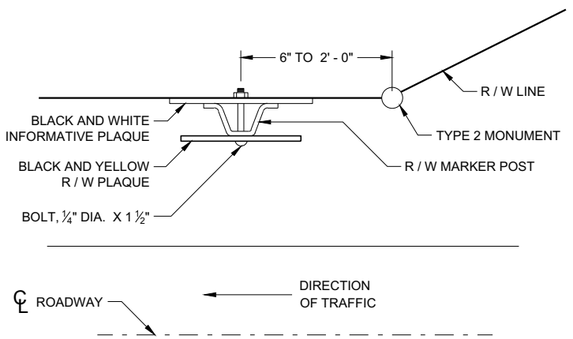

PLAN VIEW
STEEL MARKER POST

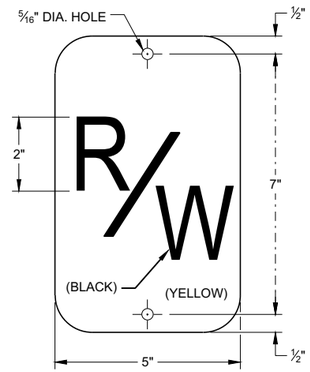

R / W PLAQUE

THE RIGHT-OF-WAY PLAQUE AND INFORMATIVE PLAQUE WILL BE FURNISHED BY THE WISCONSIN DEPARTMENT OF TRANSPORTATION.

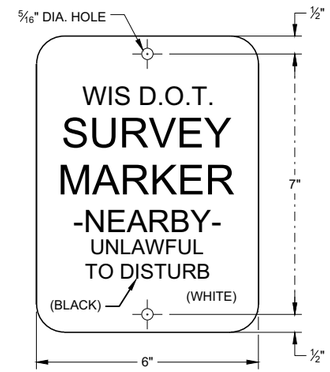

INFORMATIVE PLAQUE

GENERAL NOTES

DETAILS OF CONSTRUCTION NOT SHOWN ON THIS DRAWING SHALL CONFORM TO THE PERTINENT REQUIREMENTS OF THE STANDARD SPECIFICATIONS AND THE APPLICABLE SPECIAL PROVISIONS.

A STEEL MARKER POST FOR RIGHT -OF-WAY SHALL BE PLACED IN THE RIGHT-OF-WAY WITH THE BACK OF THE POST ON THE LONGER RIGHT-OF-WAY TANGENT, 6 INCHES TO 24 INCHES FROM EACH TYPE 2 MONUMENT TO SERVE AS A GUARD POST, AND AT OTHER LOCATIONS AS SHOWN ON THE PLANS OR AS DIRECTED BY THE ENGINEER.

THE "R/W" PLAQUE SHALL FACE THE ROADWAY AND THE INFROMATIVE PLAQUE SHALL FACE AWAY FROM THE ROADWAY. "R/W" AND INFORMATIVE PLAQUES WILL BE FURNISHED BY THE WISCONSIN DEPARTMENT OF TRANSPORTATION.

STEEL MARKER POSTS SHALL MEET THE MINIMUM MATERIAL REQUIREMENTS FOR STEEL DELINEATOR POSTS; EXCEPT POSTS PAINTED WITH FEDERAL YELLOW ENAMEL NEED NOT BE ZINC COATED.

(1) IN AREAS OF SOLID ROCK, DRILL A BORE HOLE 2" GREATER THAN THE WIDEST DIMENSION OF THE POST CROSS SECTION INTO THE ROCK A MINIMUM DEPTH OF 12 INCHES. CUT OR SPLICE THE POST SO THAT A MINIMUM LENGTH OF 3' - 10" PROTRUDES ABOVE THE GROUND. BLOW OUT THE BORE HOLE IN THE ROCK USING COMPRESSED AIR. FILL THE BORE HOLE WITH CEMENT GROUT OR EQUIVALENT, DEPENDING ON THE STABILITY OF THE ROCK.

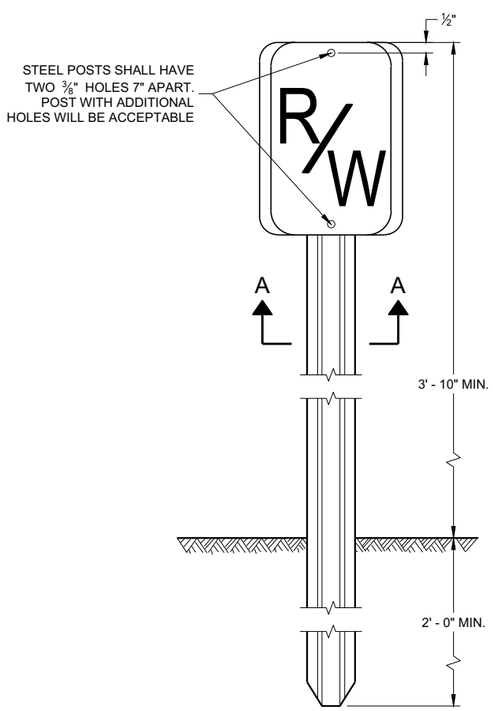

FRONT VIEW
STEEL MARKER POST

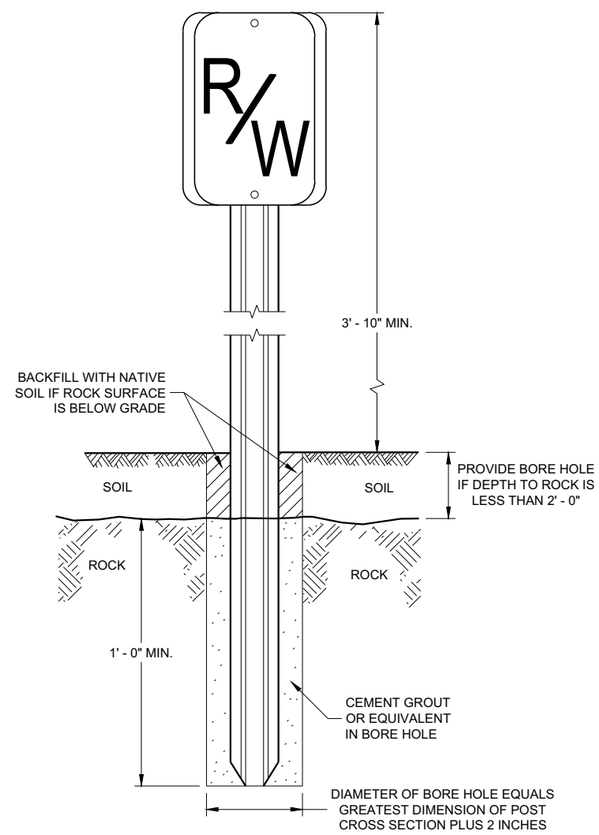

FRONT VIEW
ROCK INSTALLATION (1)

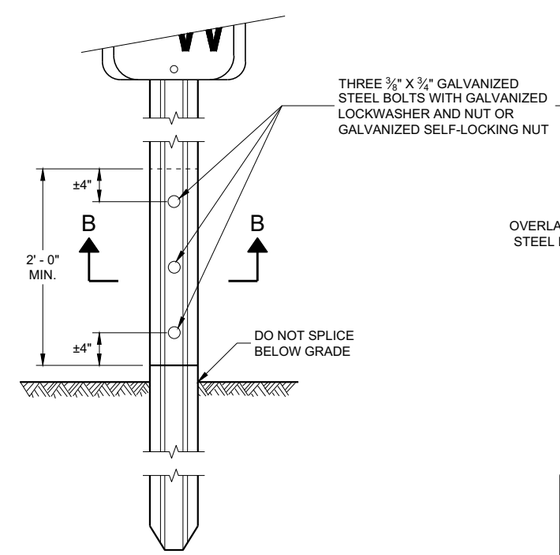

FRONT VIEW
SPLICE DETAIL

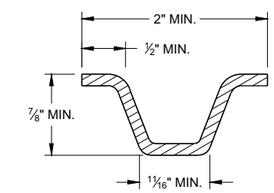

MIN. WEIGHT 1.12 LB./FT.
SECTION A - A

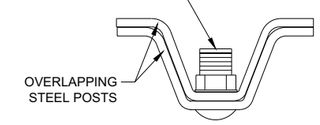

SECTION B - B

MARKER POST
FOR RIGHT - OF - WAY

STATE OF WISCONSIN
DEPARTMENT OF TRANSPORTATION

APPROVED
2/18/2016 — DATE
/S/ Ray Kumapayi — CHIEF SURVEYING AND MA ENGINEER
FHWA

6

6

SDD 15A01 - 13a

SDD 15A01 - 13a

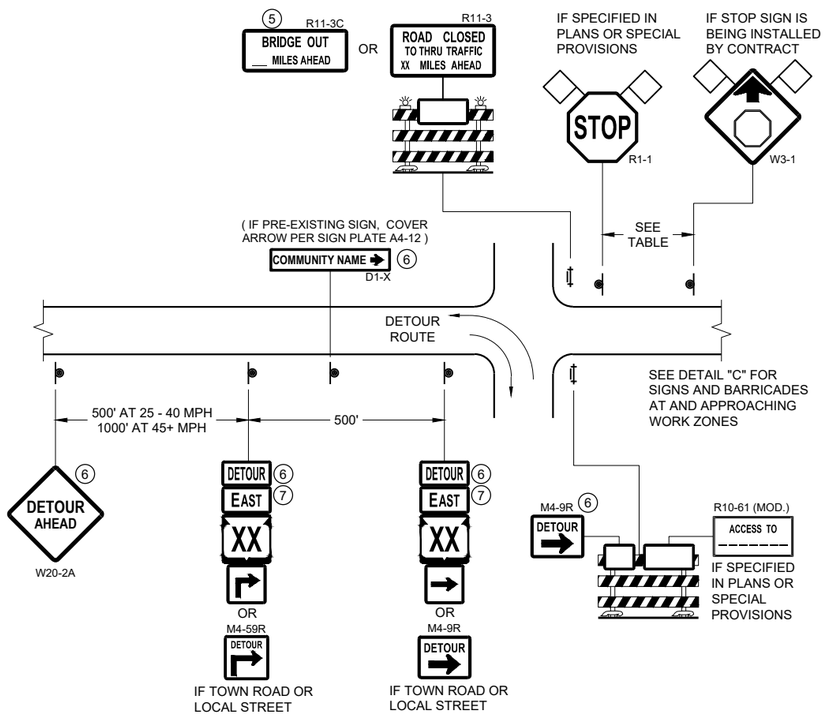

DETAIL A
MAINLINE CLOSURE WITH POSTED DETOUR
WORK ZONE GREATER THAN OR EQUAL TO ½ MILE FROM DETOUR ROUTE (1000 FEET IF URBAN)

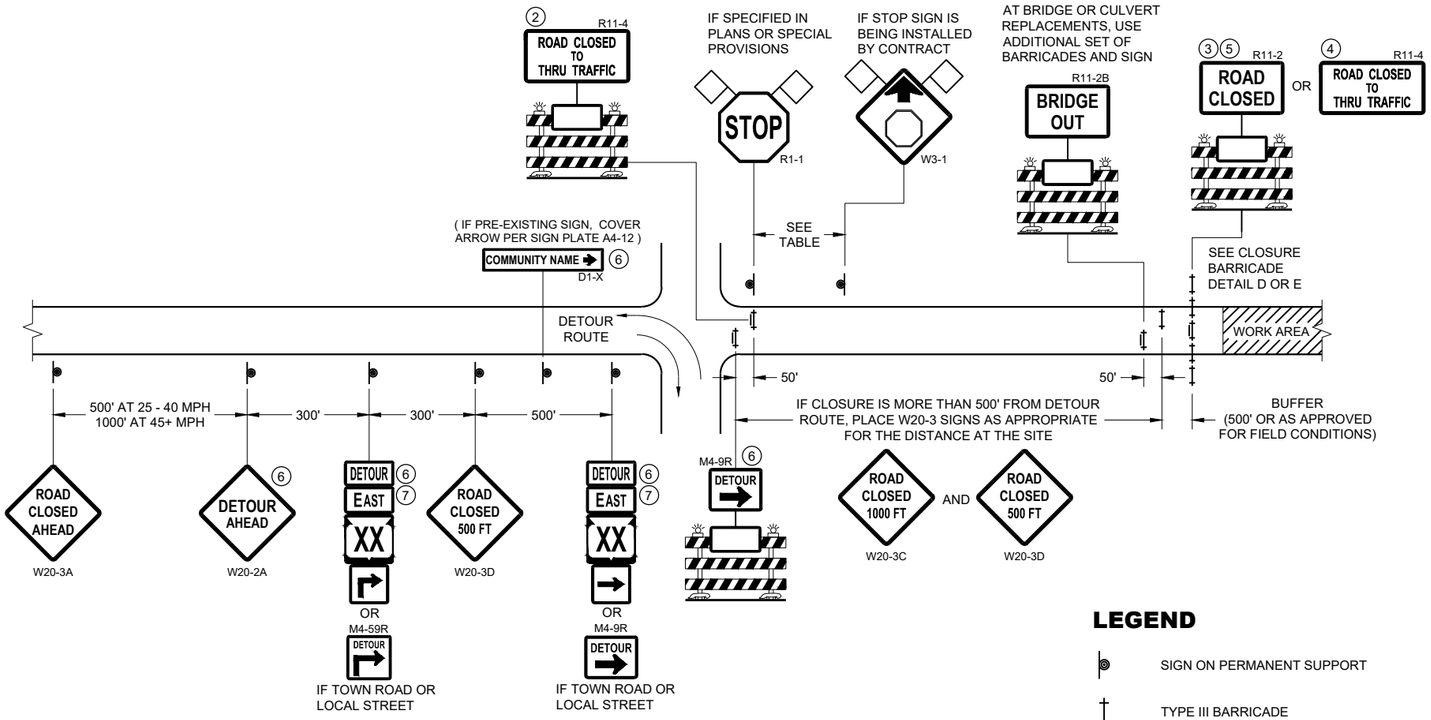

DETAIL B
MAINLINE CLOSURE WITH POSTED DETOUR
WORK ZONE LESS THAN ½ MILE FROM DETOUR ROUTE (1000 FEET IF URBAN)

LEGEND

- SIGN ON PERMANENT SUPPORT
- TYPE III BARRICADE
- TYPE III BARRICADE WITH ATTACHED SIGN
- TYPE "A" WARNING LIGHT (FLASHING)
- WORK AREA
- FLAGS, 16" X 16" MIN. (ORANGE)
- DETOUR M4 - 8
- EAST M3 - X
- XX M1 - 4 OR XX M1 - 6 OR COUNTY X M1 - 5A
- M05 - 1 OR M06 - 1

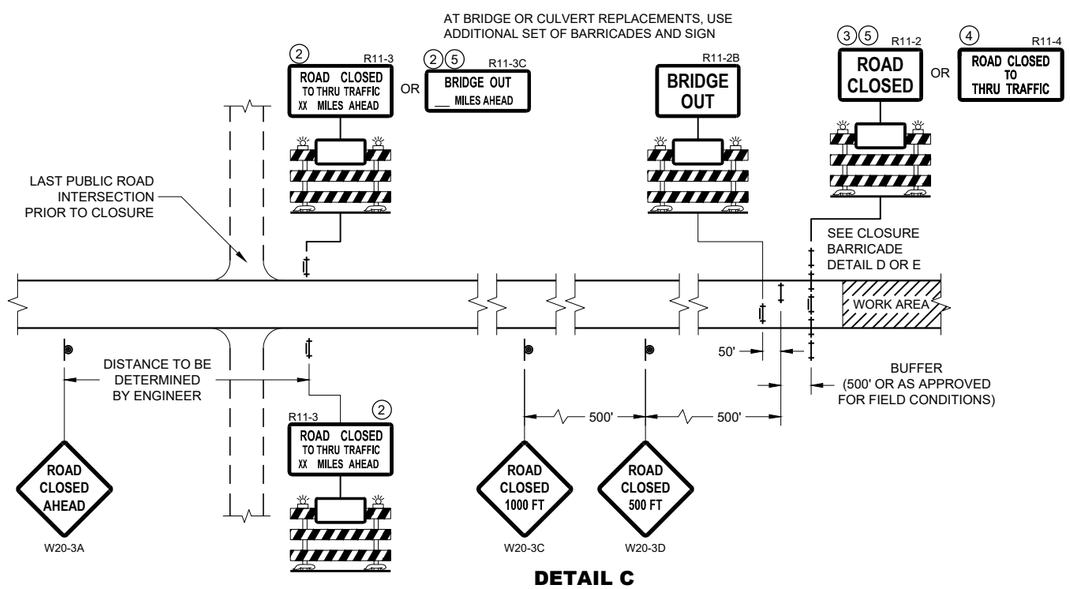

DETAIL C
MAINLINE CLOSURE, NO POSTED DETOUR

SPEED LIMIT (MPH)	"STOP AHEAD" ADVANCE WARNING DISTANCE (FT)
25	200
30	200
35	350
40	350
45	500
50	550
55	750

SEE SDD 15C2-SHEET "b" FOR GENERAL NOTES AND FOOTNOTES 1 THROUGH 7

BARRICADES AND SIGNS FOR MAINLINE CLOSURES

STATE OF WISCONSIN
DEPARTMENT OF TRANSPORTATION

APPROVED
February 2020 /S/ Andrew Heidtke
DATE WORK ZONE ENGINEER
FHWA

6

SDD 15C02 - 08a

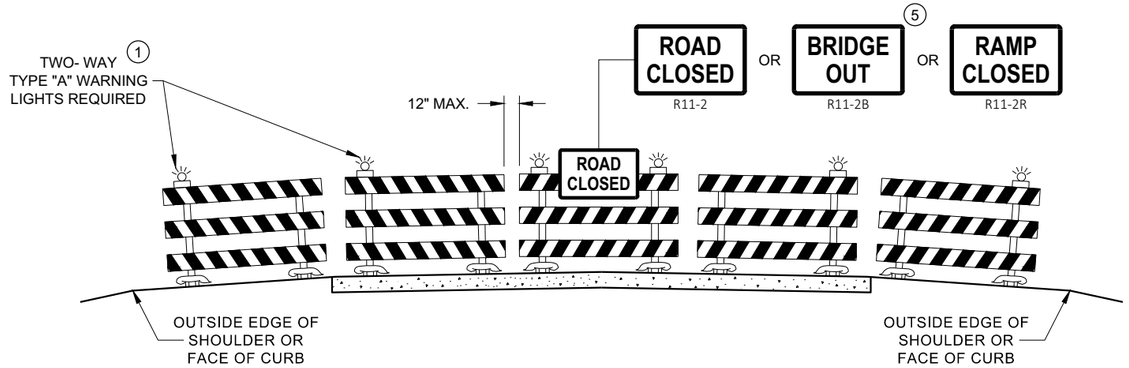

DETAIL D
ROAD CLOSURE BARRICADE DETAIL
APPROACH VIEW

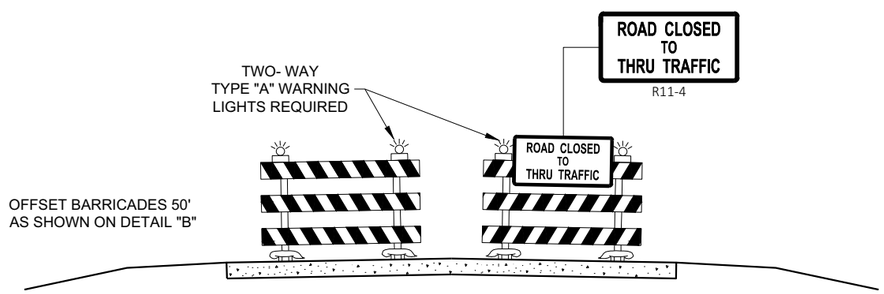

DETAIL E
LANE CLOSURE BARRICADE DETAIL
APPROACH VIEW

SEE SDD 15C2 - SHEET "a" FOR LEGEND

GENERAL NOTES

THE EXACT NUMBER, LOCATION, AND SPACING OF ALL SIGNS AND BARRICADES SHALL BE ADJUSTED TO FIT FIELD CONDITIONS AS APPROVED BY THE ENGINEER.

ANY SIGNS TEMPORARY OR EXISTING, WHICH CONFLICT WITH TRAFFIC CONTROL "IN USE", SHALL BE REMOVED OR COVERED AS NEEDED AND AS APPROVED BY THE ENGINEER.

THE SPACING BETWEEN TRAFFIC CONTROL SIGNS SHOULD BE ADJUSTED TO NOT CONFLICT WITH AND SHOULD PROVIDE A DESIRABLE MINIMUM OF 200 FEET CLEARANCE TO EXISTING SIGNS THAT WILL REMAIN IN PLACE.

BARRICADES THAT MUST BE MOVED FOR A WORK OPERATION SHALL BE IMMEDIATELY RE-ESTABLISHED UPON COMPLETION OF THE OPERATION, OR FOR CONTINUING OPERATIONS, AT THE END OF EACH WORKING DAY.

SIGNS THAT WILL BE IN PLACE LESS THAN 7 CONTINUOUS DAYS AND NIGHTS MAY BE MOUNTED ON PORTABLE SUPPORTS.

ALL TYPE III BARRICADES SHALL HAVE RAILS REFLECTORIZED ON BOTH FACES. STRIPES SHALL BE PROPERLY SLOPED DOWN TOWARD THE TRAFFIC SIDE OR AS SHOWN IN THE ROAD CLOSURE BARRICADE DETAIL "D" FOR FULL ROAD CLOSURES.

TYPE "A" LOW - INTENSITY FLASHING WARNING LIGHTS SHALL BE VISIBLE ON BOTH SIDES OF THE BARRICADE.

THE R11 - 2, R11 - 3, M4 - 9, R11 - 4, AND R10 - 61 SIGNS PLACED ON THE BARRICADES SHALL COVER NO MORE THAN THE TOP RAIL. THE SIGNS SHALL NOT COVER ANY PORTION OF THE MIDDLE RAIL OR BOTTOM RAILS.

"WO" AND "MO" SIGNS ARE THE SAME AS "W" AND "M" SIGNS EXCEPT THE BACKGROUND IS ORANGE.

ALL SIGNS SHALL BE 48" X 48" UNLESS OTHERWISE NOTED BELOW:
- R11 - 2 SHALL BE 48" X 30"
- R11 - 3 SHALL, R11 - 4 AND R10 - 61 SHALL BE 60 " X 30"
- M4 - 9 SHALL BE 30" X 24"
- M3 - X SHALL BE 24" X 12" (36" X 18" IF NEEDED TO MATCH EXISTING SIGNS)
- M4 - 8 SHALL BE 24" X 12" (36" X 18" IF NEEDED TO MATCH EXISTING SIGNS)
- M1 - 4, M1 - 5A AND M1 - 6 SHALL BE 24" X 24" (36" X 36" IF NEEDED TO MATCH EXISTING SIGNS)
- MO5 - 1 AND MO6 - 1 SHALL BE 21" X 21" (30" X 30" IF NEEDED TO MATCH EXISTING SIGNS)
- D1 - X SHALL BE AS SHOWN ON SPECIFIC PROJECT SIGNING DETAIL SHEETS.
- R1 - 1 SHALL BE 36" X 36"

1. TWO WARNING LIGHTS SHALL BE PROVIDED ON THE CENTER BARRICADE AND A MINIMUM OF ONE WARNING LIGHT SHALL BE PROVIDED ON EACH OF THE OTHER BARRICADES WITHIN THE ROADWAY LIMITS. SPACING OF THE WARNING LIGHTS SHALL BE UNIFORM TO THE EDGE OF ROADWAY AS SHOWN (APPROX. 8 FOOT LIGHT SPACING.
2. THESE SIGNS AND BARRICADES ARE NOT REQUIRED IF ROAD CLOSURE BEGINS AT AN INTERSECTION.
3. FOR ROAD CLOSURE WITHOUT LOCAL ACCESS TO PROJECT, SEE ROAD CLOSURE BARRICADE DETAIL "D".
4. FOR ROAD CLOSURE WITH LOCAL ACCESS TO PROJECT, SEE ROAD CLOSURE BARRICADE DETAIL "E".
5. FOR BRIDGE OR CULVERT REPLACEMENTS, SUBSTITUTE "BRIDGE OUT" INSTEAD OF "ROAD CLOSED" ON R11 - 2 AND R11 - 3 SIGNS.
6. INSTALL DETOUR AND COMMUNITY GUIDE SIGNS AND ARROWS ONLY IF SPECIFIED IN THE CONTRACT. IF THERE ARE EXISTING ROUTE MARKER ASSEMBLIES THAT WILL REMAIN IN PLACE, ADJUST THE LOCATION OF THE DETOUR ROUTE SIGNS TO CORRESPOND WITH THE EXISTING ASSEMBLIES. MODIFY EXISTING SIGNS WHERE POSSIBLE. SEE SPECIFIC PROJECT DETOUR SIGNING DETAIL SHEETS. IF DETOUR SIGNS ARE BEING INSTALLED BY OTHERS, PLACE THE CONTRACTED TRAFFIC CONTROL SIGNS TO ALLOW FOR PLACEMENT OF ALL WARNING, DETOUR AND GUIDE SIGNS AS SHOWN.
7. "EAST" CARDINAL DIRECTION MARKERS AND RIGHT TURN ARROWS ARE SHOWN. USE OTHER CARDINAL DIRECTIONS AND ARROWS AS APPROPRIATE.

BARRICADES AND SIGNS FOR VARIOUS CLOSURES

STATE OF WISCONSIN
DEPARTMENT OF TRANSPORTATION

APPROVED
February 2020 — DATE
/S/ Andrew Heidtke — WORK ZONE ENGINEE
FHWA

6

SDD 15C02 - 08b

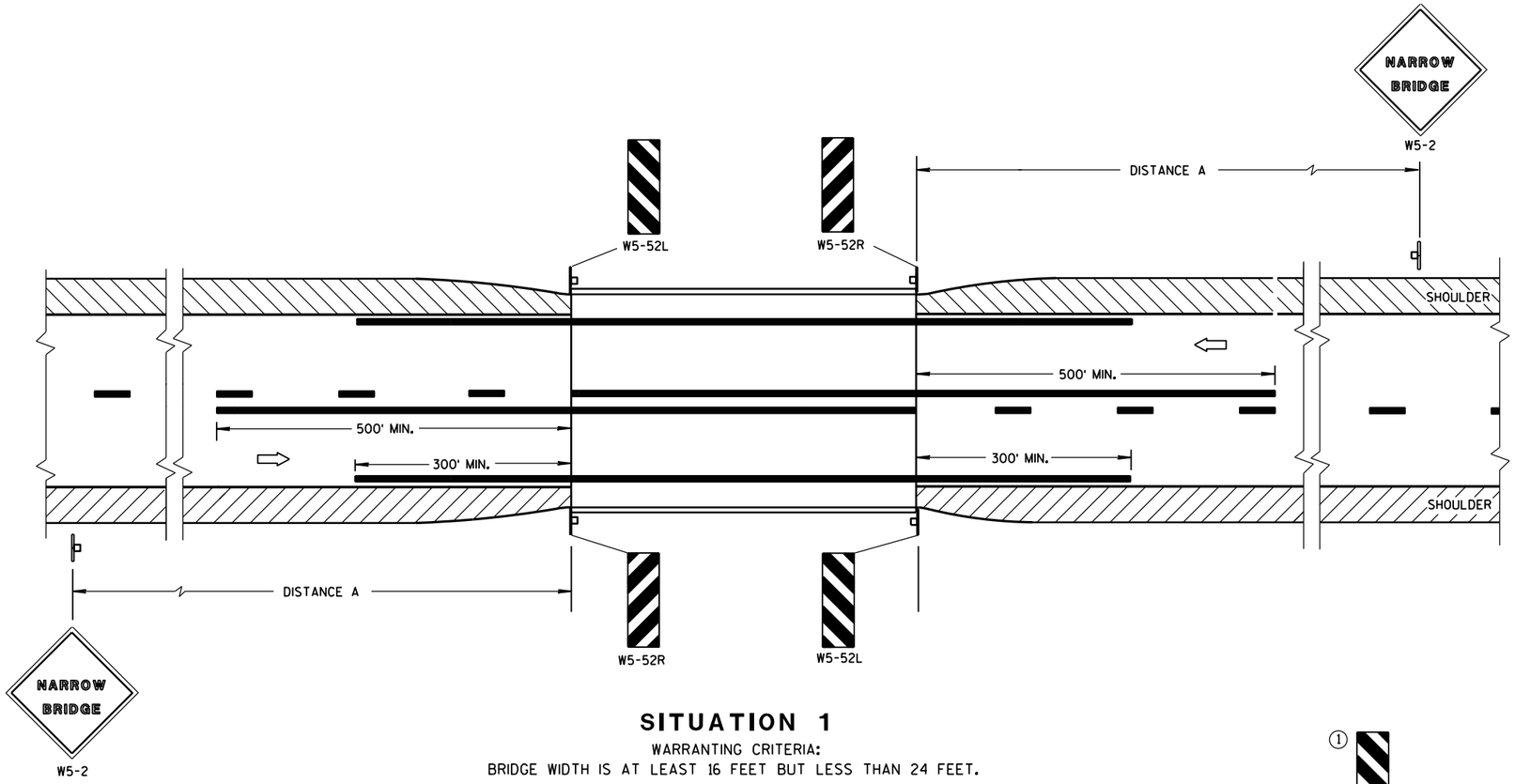

SITUATION 1

WARRANTING CRITERIA:
BRIDGE WIDTH IS AT LEAST 16 FEET BUT LESS THAN 24 FEET.

GENERAL NOTES

DETAILS OF TRAFFIC CONTROL DEVICES AND INSTALLATION NOT SHOWN ON THIS DRAWING SHALL CONFORM TO THE PERTINENT REQUIREMENTS OF THE STANDARD SPECIFICATIONS, THE SPECIAL PROVISIONS, AND THE MANUAL ON UNIFORM TRAFFIC CONTROL DEVICES.

LOCATE W5-52 SIGN POST(S) BEHIND GUARDRAIL WHEN PRESENT.

PLACE THE EDGE OF THE W5-52 SIGN IN LINE WITH FACE OF CURB OR PARAPET.

(1) OMIT ON ONE-WAY TRAVELLED WAYS.

⇨ DIRECTION OF TRAFFIC

DISTANCE TABLE

POSTED OR 85th PERCENTILE SPEED	DISTANCE "A"
25	150'
30	200'
35	250'
40	300'
45	400'
50	550'
55	750'

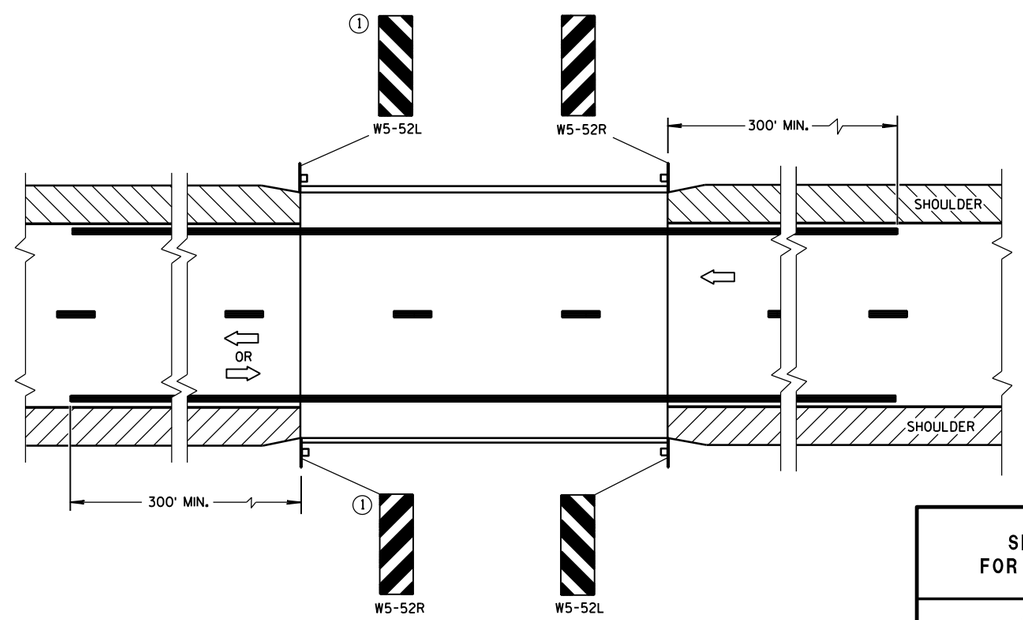

SITUATION 2

WARRANTING CRITERIA:

1. BRIDGE WIDTH IS AT LEAST 24 FEET AND
2. BRIDGE SHOULDER WIDTH IS LESS THAN 6 FEET.

SIGNING & MARKING FOR TWO LANE BRIDGES

STATE OF WISCONSIN
DEPARTMENT OF TRANSPORTATION

APPROVED
June 2017 — DATE
/S/ Matthew R. Rauch — STATE SIGNING AND MAR... ...NEER
FHWA

6

S.D.D. 15 C 6-9

GENERAL NOTES

1. REFLECTIVE SHEETING SHALL FOLLOW THE REQUIREMENTS IN THE APPROVED PRODUCTS LISTING FOR SIGN SHEETING.
2. LOCATION OF WARNING LIGHTS WHEN SHOWN ON THE PLAN.

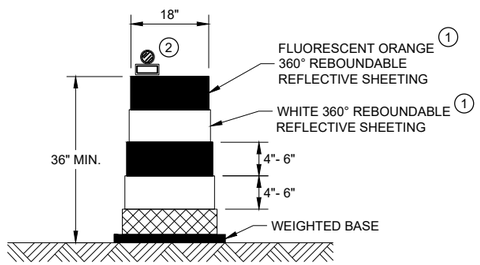

DRUM

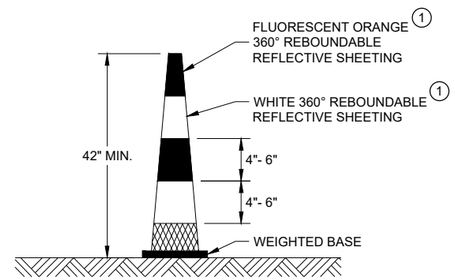

42" CONE

DO NOT USE IN TAPERS
½ SPACING OF DRUMS

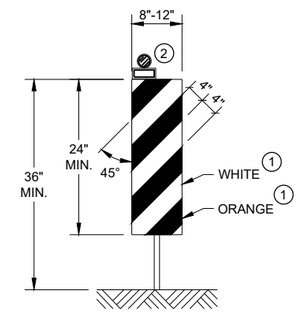

VERTICAL PANEL

THE STRIPES SHALL SLOPE DOWNWARD TO
THE TRAFFIC SIDE FOR CHANNELIZATION.

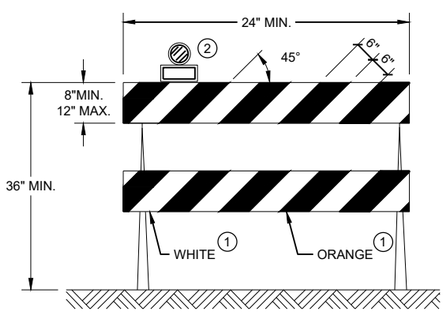

TYPE II BARRICADE

FOR RAILS LESS THAN 36" LONG, 4" WIDE STRIPES
MAY BE USED. ALL STRIPES SHALL SLOPE DOWNWARD
TO THE TRAFFIC SIDE FOR CHANNELIZATION.

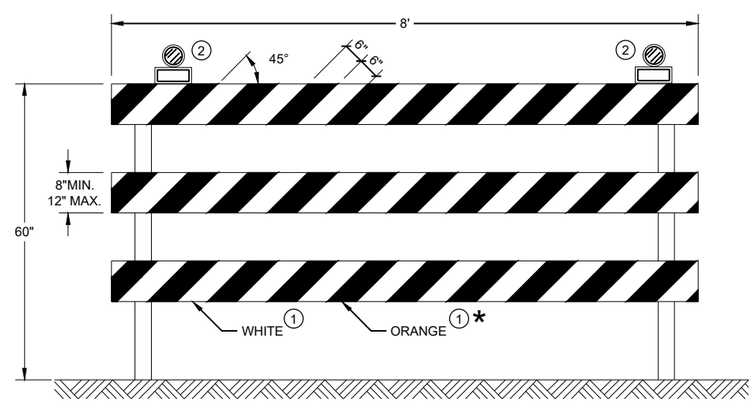

TYPE III BARRICADE

IF SIGN MOUNTED, DO NOT COVER MORE THAN 50% OF THE TOP
TWO RAILS OR 33% OF THE TOTAL AREA OF THE THREE RAILS.

* IF USED FOR A PERMANENT APPLICATION USE RED SHEETING.

CHANNELIZING DEVICES DRUMS, CONES, BARRICADES AND VERTICAL PANELS

STATE OF WISCONSIN
DEPARTMENT OF TRANSPORTATION

APPROVED
May 2021 — DATE
/S/ Andrew Heidtke — WORK ZONE ENGINEE
FHWA

6

SDD 15C11 - 09b

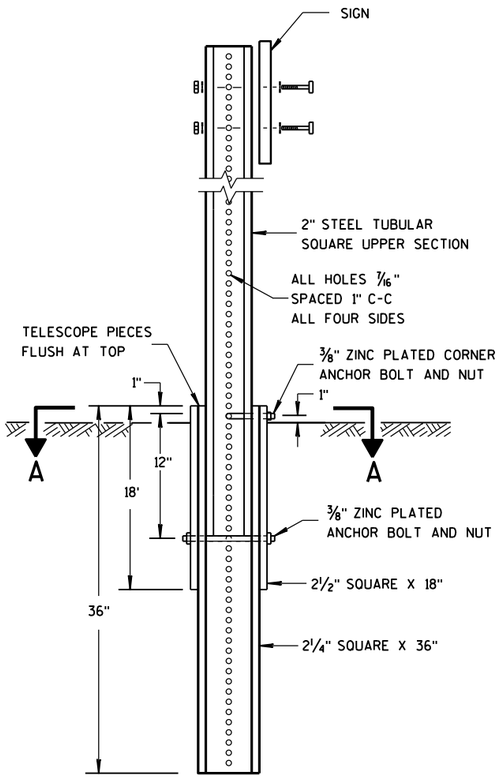

DETAIL OF TUBULAR STEEL SIGN POST

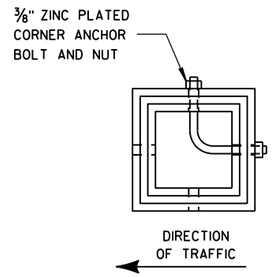

SECTION A-A

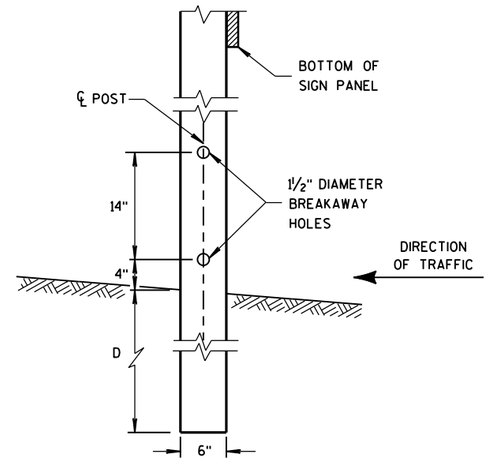

4"x6" WOOD POST MODIFICATION

GENERAL NOTES

1. 6 FEET FROM THE EDGE OF PAVEMENT (EDGE LINE LOCATION) UNLESS OTHERWISE DIRECTED BY THE PROJECT ENGINEER. LATERAL OFFSET SHOULD BE ADJUSTED TO AVOID THE DITCH FLOWLINE.
2. THE EXISTENCE OF CURB AND GUTTER DOES NOT IN ITSELF MANDATE THE VERTICAL CLEARANCE ILLUSTRATED. THAT HEIGHT IS TYPICALLY MEASURED WHERE THERE IS SIDEWALK ADJACENT TO THE ROADWAY OR PARKING IS PERMITTED. IN THE ABSENCE OF SIDEWALK, VERTICAL CLEARANCE IS MEASURED FROM THE TOP OF THE CURB. IF NO SIDEWALK AND NO PARKING, VERTICAL CLEARANCE MAY BE REDUCED TO 5 FOOT MINIMUM. OFFSET OF SIGNS IS MEASURED FROM THE CURB FLOWLINE.
3. FOR SIGNS REQUIRING 4 POSTS, SPACE INTERMEDIATE POSTS EVENLY.

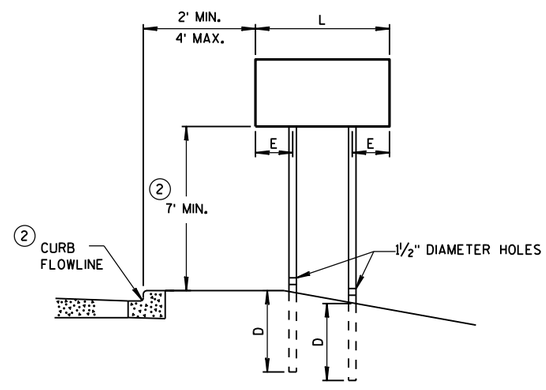

URBAN AREA

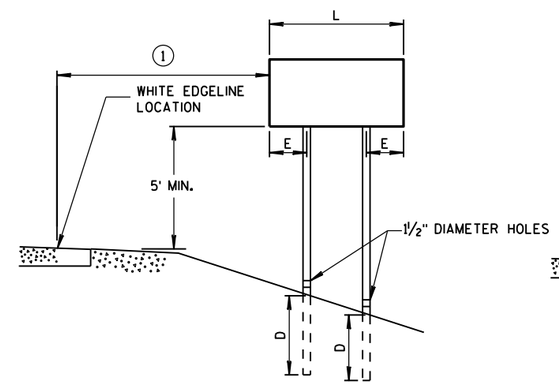

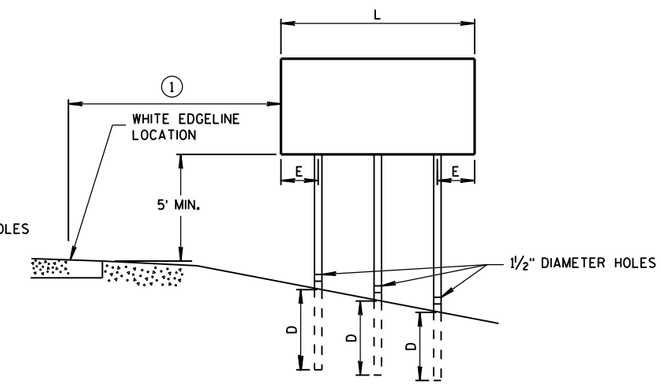

RURAL AREA

POST MOUNTING DETAIL FOR TEMPORARY TRAFFIC CONTROL FIXED MESSAGE SIGNS

TUBULAR STEEL POSTS

AREA OF SIGN INSTALLATION (SQ. FT.)	NUMBER OF REQUIRED TUBULAR STEEL POSTS
9 OR LESS	1
GREATER THAN 9 LESS THAN OR EQUAL TO 18	2
GREATER THAN 18 LESS THAN OR EQUAL TO 27	3

SIGNS WIDER THAN 3 FEET OR LARGER THAN 9 SQ. FT. SHALL BE MOUNTED ON MULTIPLE POSTS (SEE ABOVE TABLE).

SIGNS LARGER THAN 27 SQ. FT. SHALL NOT BE MOUNTED ON TUBULAR STEEL POSTS.

WOOD POST EMBEDMENT DEPTH

AREA OF SIGN INSTALLATION (SQ. FT.)	D (MIN)
20 OR LESS	4'
GREATER THAN 20	5'

4" X 6" WOOD POST

POST SPACING REQUIREMENTS		NUMBER OF WOOD POSTS REQUIRED
L	E	
48" OR LESS AND LESS THAN 20 SQ. FT.	-	1
LESS THAN 60"	12"	2
60" TO 120"	L/5	2
GREATER THAN 120" LESS THAN 168"	12"	3
168" AND GREATER	12"	4

SEE NOTE 3

TEMPORARY TRAFFIC CONTROL SIGN MOUNTING

STATE OF WISCONSIN
DEPARTMENT OF TRANSPO

6

S.D.D. 15 D 38-2a

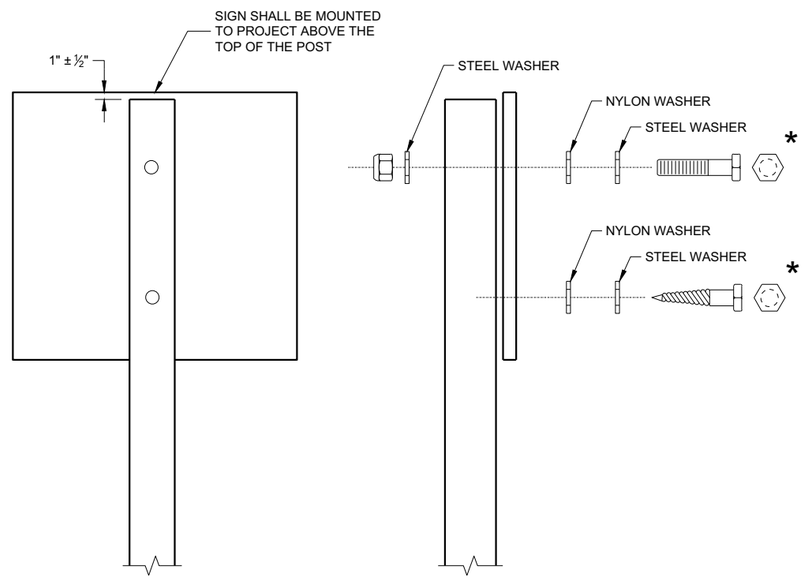

NUTS, BOLTS AND LAGS USED FOR MOUNTING SIGNS
SHALL HAVE HEXAGONAL HEADS AND SHALL BE EITHER:

A. HOT DIP GALVANIZED IN ACCORDANCE WITH ASTM
DESIGNATION: A 153, CLASS D, OR SC 3
B. ELECTRO-GALVANIZED IN ACCORDANCE WITH ASTM
DESIGNATION: B 633, TYPE III, SC 3

THREADS ON BOLTS AND NUTS SHALL BE MANUFACTURED WITH SUFFICIENT ALLOWANCE FOR THE CADMIUM PLATE OR GALVANIZED COATING TO PERMIT THE NUTS TO RUN FREELY ON THE BOLTS.

WOOD POST (4" x 6")
LAG SCREWS - ⅜" x 3"
MACHINE BOLTS - 5/16" x 6 ½" OR 7" LENGTH W/NUTS

SQUARE STEEL POST (2" x 2")
MACHINE BOLTS - ⅜" x 3 ¼" LENGTH W/NUTS
RIVETS - 9/32" (6605-9-6) BULB-TITE, TRI-FOLD, ALUMINUM
BODY/MANDREL O.D. FLANGE 0.720 - 0.765 INCH,
GRIP RANGE 0.042 - 0.375 INCH

WASHERS (ALL POSTS) -
1 ¼" O.D. x ⅜" I.D. x 1/16" STEEL
1 ¼" O.D. x ⅜" I.D. x 0.080 NYLON

* TWO DIFFERENT FASTENING SYSTEMS ARE SHOWN FOR ILLUSTRATION PURPOSES. ON ANY INDIVIDUAL SIGN, EITHER ONE OR THE OTHER SYSTEM SHALL BE USED. ACTUAL NUMBER OF FASTENERS PER SIGN VARIES WITH THE SIGN AREA. FOR A SINGLE POST INSTALLATION, ALL SIGNS GREATER THAN 9 SQ. FT. REQUIRE THE USE OF 3 FASTENERS.

6

6

SDD 15D38 - 02b

ATTACHMENT OF SIGNS TO POSTS

STATE OF WISCONSIN
DEPARTMENT OF TRANSPORTATION

APPROVED
June 2017 — DATE
/S/ Andrew Heidtke — WORK ZONE ENGINEE
FHWA

SDD 15D38 - 02b

URBAN AREA

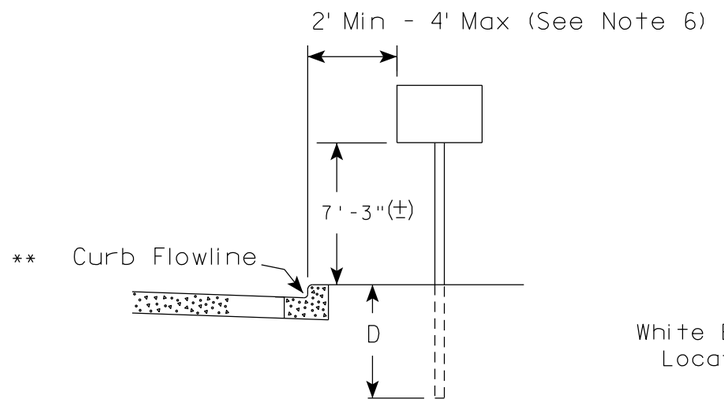

RURAL AREA (See Note 2)

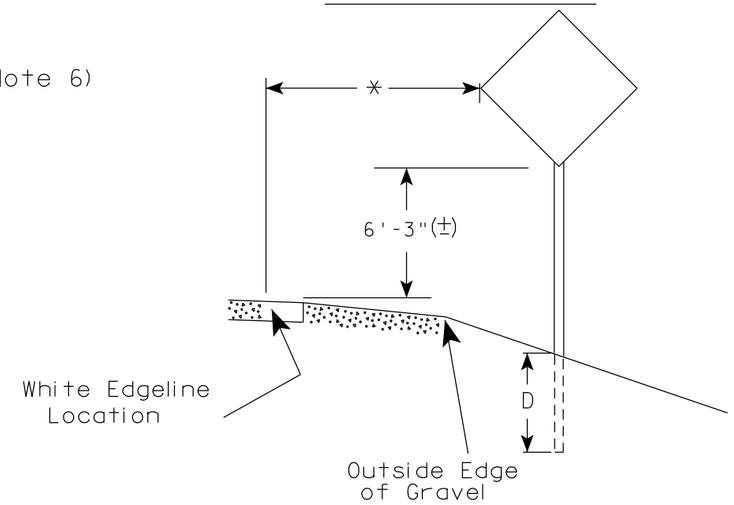

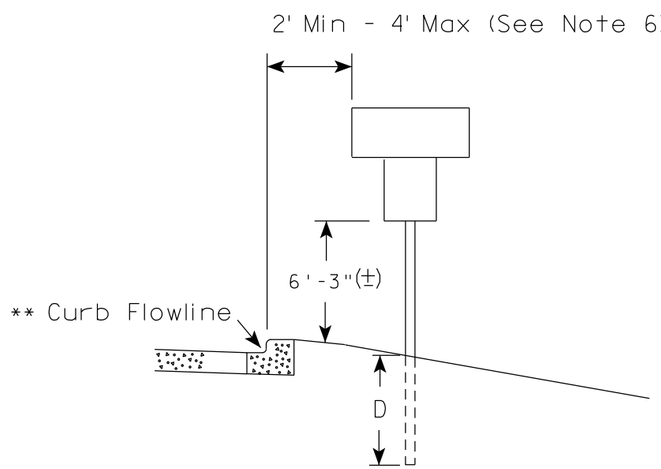

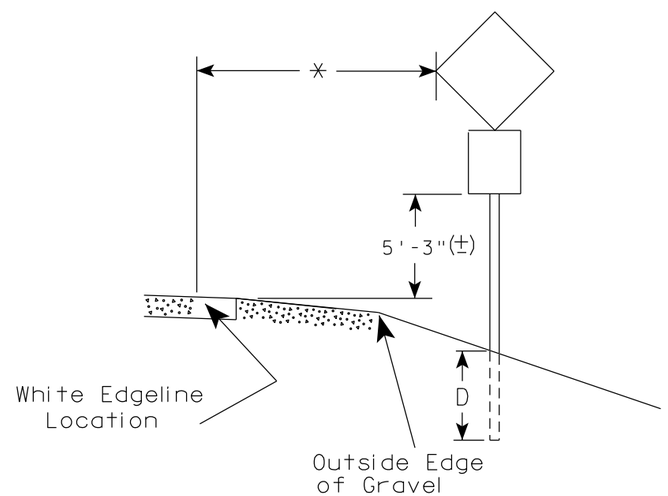

** The existence of curb and gutter does not in itself mandate the vertical clearance illustrated. That height is typically measured where there is sidewalk adjacent to the roadway or parking is permitted. In the absence of sidewalk vertical clearance is measured from the top of the curb. Offset of signs is measured from the flow line.

* 6 feet from edge of a paved shoulder or 12 feet from the edge of pavement (edge line location) or 2 feet from outside edge of gravel, whichever is greater unless directed by project engineer.

GENERAL NOTES

1. Signs wider than 4 feet or 20 sq.ft or larger, shall be mounted on multiple posts. Refer to plate A4-4.
2. If signs are mounted on or behind barrier wall, see A4-10 sign plate.
   The Double Arrow sign (W12-1D) shall be mounted at a height of 2'-3" (±). The Chevron sign (W1-8), Roundabout Chevron panel (R6-4B), Enhanced Reference Markers, Clearance Markers (W5-52), Mile Markers (D10 series), In Road Object Markers (W5-54) & End of Road Markers (W5-56) shall be mounted at a height of 4'-3" (±).
3. For expressways and freeways, mounting height is 7'- 3" (±) or 6'-3" (±) depending upon existence of a sub-sign.
4. Minimum mounting height for signs mounted on traffic signal poles is 5'- 3" (±).
5. Offset distance shall be consistent with existing signs or consistent throughout length of project.
6. The (±) tolerance for mounting height is 3 inches.
7. Folding signs shall be mounted at a height of 5'-3" (±) or as directd by the Engineer.

POST EMBEDMENT DEPTH

Area of Sign Installation (Sq.Ft.)	D (Min)
20 or Less	4'
Greater than 20	5'

TYPICAL INSTALLATION OF PERMANENT TYPE II SIGNS ON SINGLE POSTS

WISCONSIN DEPT OF TRANSPORTATION

APPROVED Matthew R Rauch for State Traffic Engineer

DATE 5/13/2020 PLATE NO. A4-3.22

7

7

PROJECT NO:	HWY:	COUNTY:		SHEET NO: 36	E

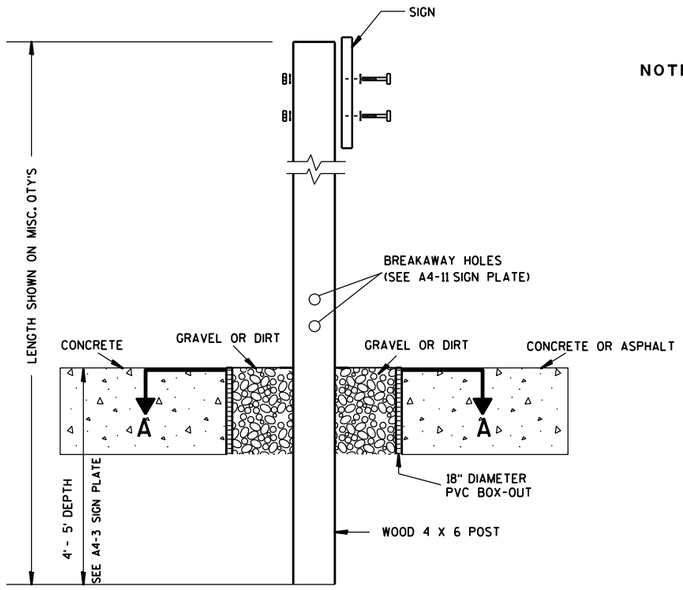

ELEVATION VIEW

DETAIL OF WOOD 4 X 6 SIGN POST IN BOX-OUT

NOTES:
1. ALL MATERIAL TO BE APPROVED BY ENGINEER PRIOR TO INSTALLATION
2. SEE SIGN PLATE A4-8 FOR SIGN HARDWARE REQUIREMENTS
3. 18 INCH X 18 INCH SQUARE BOX-OUTS MAY BE USED FOR INSTALLATIONS IN EXISTING CONCRETE OR ASPHALT LOCATIONS.

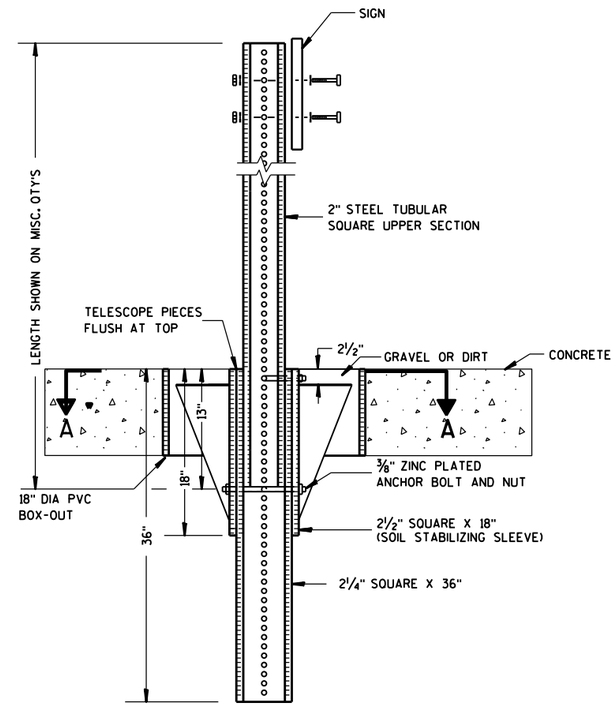

ELEVATION VIEW

DETAIL OF STEEL 2 X 2 SIGN POST IN BOX-OUT

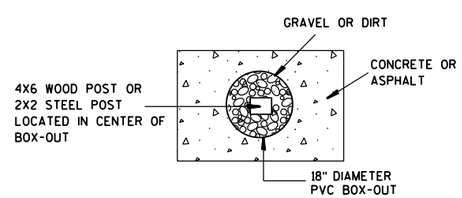

PLAN VIEW

FOR NEW CONCRETE/ASPHALT INSTALLATIONS

SIGN POST
BOX-OUTS
A4-3B

WISCONSIN DEPT OF TRANSPORTATION

APPROVED Matthew R Rauch
for State Traffic Engineer

DATE 1/27/14 PLATE NO. A4-3B.1

PROJECT NO:	HWY:	COUNTY:		SHEET NO:	E

URBAN AREA

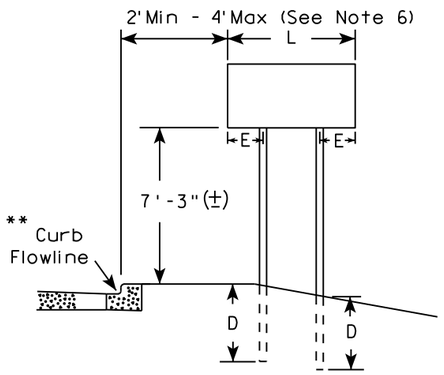

RURAL AREA (See Note 3)

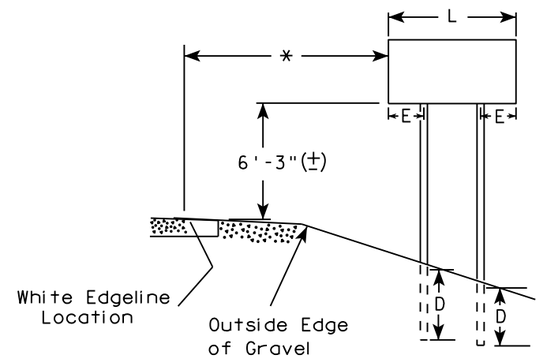

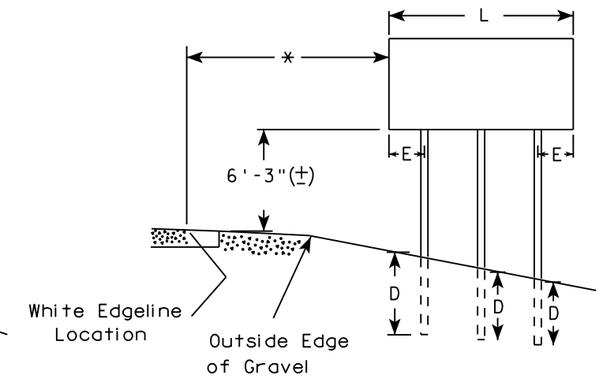

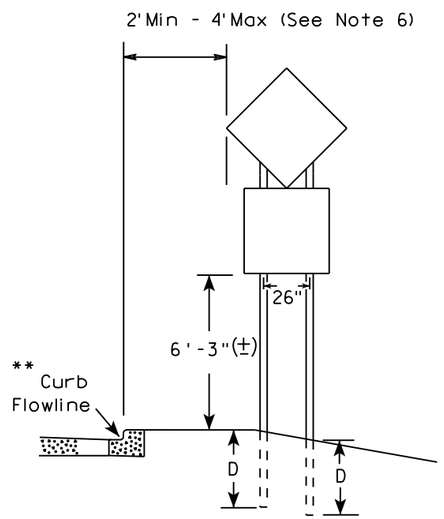

48" DIAMOND WARNING SIGN

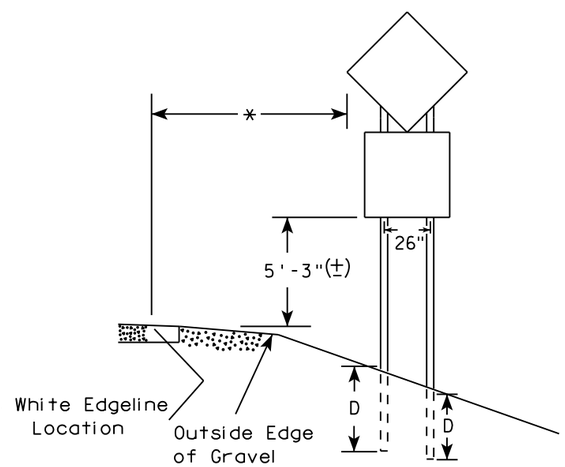

48" DIAMOND WARNING SIGN

SIGN SHAPE OTHER THAN DIAMOND (TWO POSTS REQUIRED)	
L	E
*** Greater than 48" Less than 60"	12"
60" to 108"	L/5

SIGN SHAPE OTHER THAN DIAMOND (THREE POSTS REQUIRED)	
L	E
Greater than 108" to 144"	12"

GENERAL NOTES

1. For 3 or 4 post installations, individual post spacing shall be greater than 3'-6".
2. See tables below for required number of posts.
3. For expressways and freeways, mounting height is 7'-3" (±) or 6'-3" (±) depending upon existence of sub-sign.
4. The (±) tolerance for mounting height is 3 inches.
5. J-Assemblies are considered to be one sign for mounting height.
6. Offset distance shall be consistent with existing signs or consistent throughout length of project.
7. Folding signs shall be mounted at a height of 5'-3" (±) or as directed by the engineer.
8. The Double Arrow sign (W12-1) shall be mounted at a height of 2'-3" (±). The Chevron sign (W1-8), Roundabout Chevron panel (R6-4B), Clearance Markers (W5-52), Mile Markers (D10 series), In Road Object Markers (W5-54) & End of Road Markers (W5-56) shall be mounted at a height of 4"-3" (±).

* 6 feet from edge of a paved shoulder or 12 feet from the edge of pavement (edge line location) or 2 feet from outside edge of gravel, whichever is greater unless directed by project engineer.

** The existence of curb and gutter does not in itself mandate the vertical clearance illustrated. That height is typically measured where there is sidewalk adjacent to the roadway or parking is permitted. In the absence of sidewalk vertical clearance is measured from the top of the curb. Offset of signs is measured from the flow line.

*** See A4-3 sign plate for signs 4' or less in width and less than 20 S.F. in area.

POST EMBEDMENT DEPTH

Area of Sign Installation (Sq. Ft.)	D (Min)
20 or Less	4'
Greater than 20	5'

TYPICAL INSTALLATION OF TYPE II SIGNS ON MULTIPLE POSTS

WISCONSIN DEPT OF TRANSPORTATION

APPROVED Matthew R Rauch
For State Traffic Engineer

DATE 8/21/17 PLATE NO. A4-4.15

7

7

PROJECT NO:	HWY:	COUNTY:		SHEET NO: 38	E

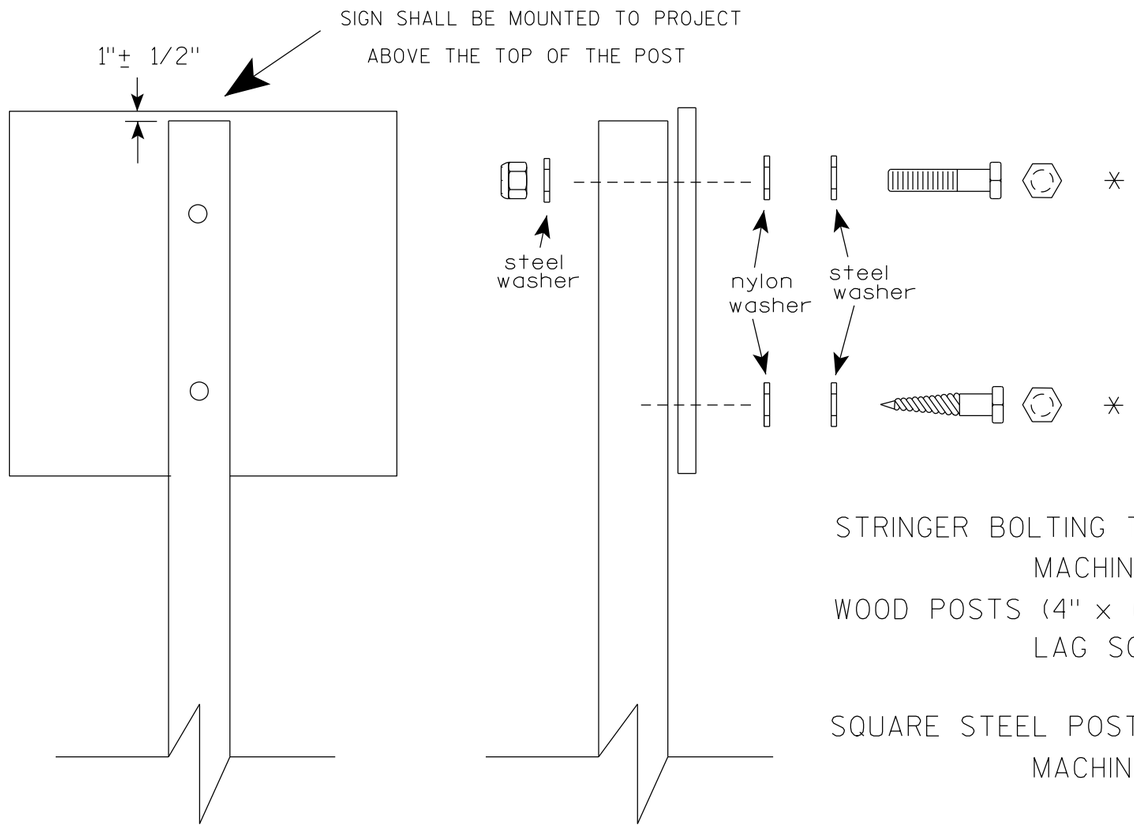

Nuts, bolts and lags used for mounting signs shall have hexagonal heads and shall be either :

a. Hot dip galvanized in accordance with ASTM Designation: A 153, Class D, or SC 3

b. Electro-galvanized in accordance with ASTM Designation : B 633, TYPE III, SC 3.

Threads on bolts and nuts shall be manufactured with sufficient allowance for the cadmium plate or galvanized coating to permit the nuts to run freely on the bolts.

STRINGER BOLTING TO ALUMINUM SIGNS (SEE SIGN PLATE A4-18)

MACHINE BOLTS - 5/16" X 1-3/4" Length w/ lock nuts

WOOD POSTS (4" x 6")

LAG SCREWS - 3/8" X 3" (NO STRINGERS ON BACK OF SIGN)
3/8" X 4" (STRINGERS ON BACK OF SIGN)

SQUARE STEEL POSTS (2" x 2")

MACHINE BOLTS - 3/8" X 3-1/4" Length w/ nuts (NO STRINGER ON BACK OF SIGN)
3/8" X 5" Length w/ nuts (STRINGERS ON BACK OF SIGN)

RIVETS - 9/32 " (6605-9-6) BULB-TITE, TRI-FOLD, ALUMINUM BODY/MANDREL
O.D. FLANGE .720-.765 INCH, GRIP RANGE .042-.375 INCH

WASHERS (ALL POSTS) -

1-1/4" O.D. X 3/8" I.D. X 1/16" STEEL
1-1/4" O.D. X 3/8" I.D. X .080 NYLON

* Two different fastening systems are shown for illustration purposes. On any individual sign, either one or the other system shall be used. Actual number of fasteners per sign varies with the sign area, but normally there are two. For a single post installation, all signs greater than 9 sq. ft. require the use of 3 fasteners.

ATTACHMENT OF SIGNS TO POSTS

WISCONSIN DEPT OF TRANSPORTATION

APPROVED Matthew R Rauch
for State Traffic Engineer

DATE 4/1/2020 PLATE NO. A4-8.9

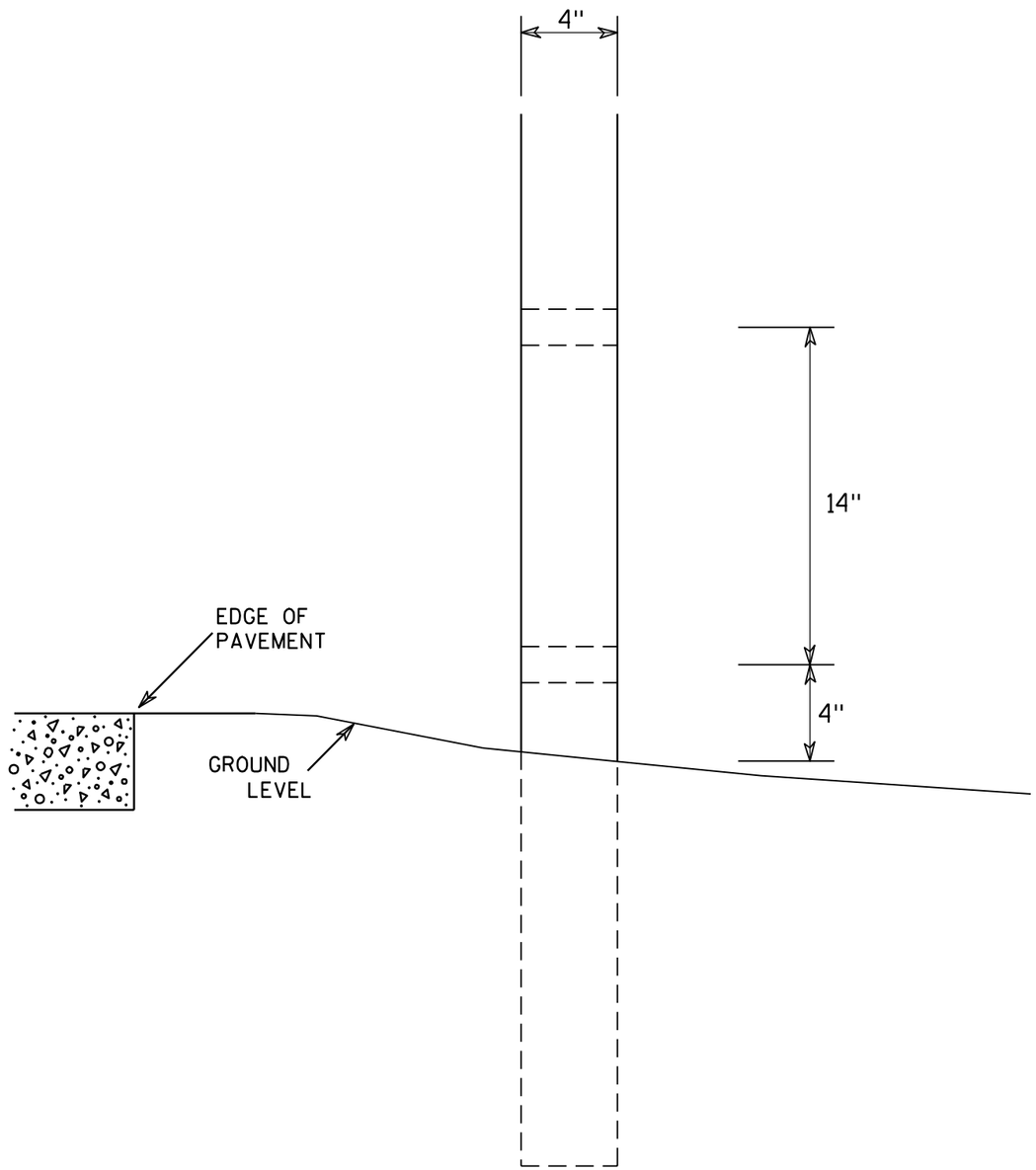

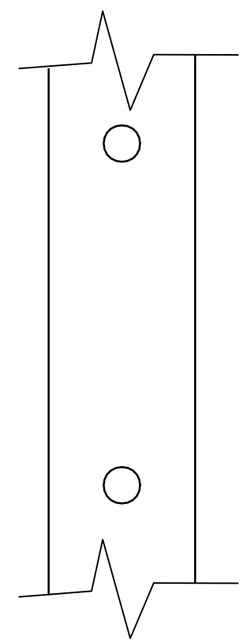

SIDE VIEW

GENERAL NOTES

1. All 4 x 6 Wood Posts shall be modified by having two 1½" diameter holes drilled perpendicular to the roadway centerline.

4 X 6 WOOD POST MODIFICATIONS

WISCONSIN DEPT OF TRANSPORTATION

APPROVED Chester J Spang for State Traffic Engineer

DATE 3/27/97 PLATE NO. A4-11.2

PROJECT NO:	HWY:	COUNTY:		SHEET NO: 40	E

BANDING

SINGLE SIGN

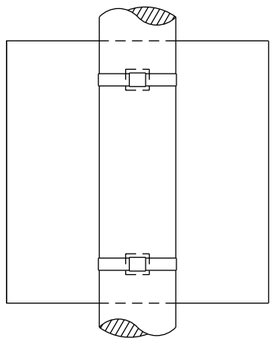

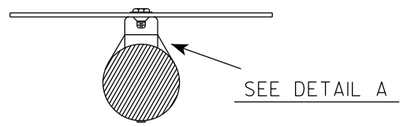

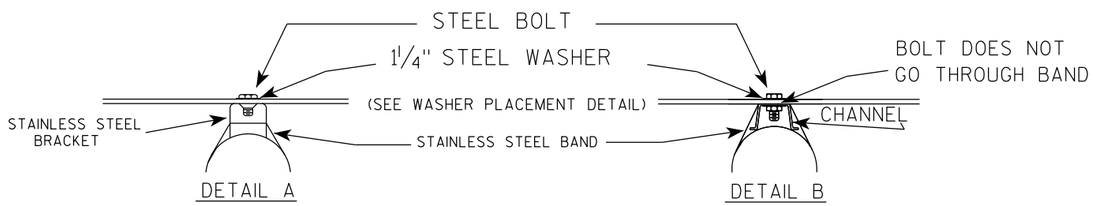

WASHER PLACEMENT

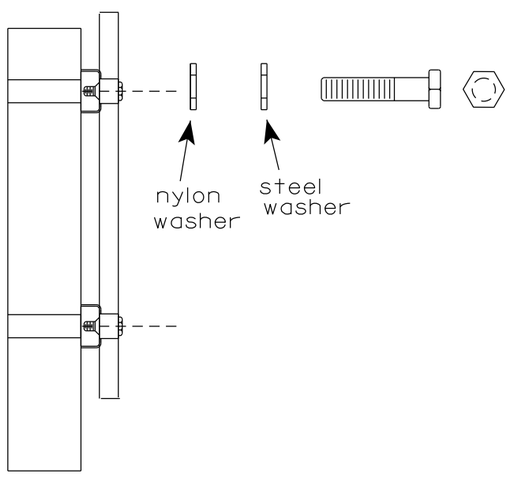

WASHERS (ALL POSTS) -
1-1/4" O.D. X 3/8" I.D. X 1/16" STEEL
1-1/4" O.D. X 3/8" I.D. X .080 NYLON
FOR ALL TYPE H SIGNS

GENERAL NOTES

1. Any sign over 3 feet in width shall use the V-Block banding method. See A5-10 standard plate.
2. Signs 3 feet or greater in height shall have three bracket bands installed. Signs less than 3 feet in height shall have two bracket bands installed.
3. Banding and assembly bracket shall be stainless steel. All bands shall be 3/4" in width and 0.025" thickness.
4. ALL SIGN MOUNTING BOLTS AND WASHERS SHALL BE EITHER:
   a. Hot dip or mechanically galvanized in accordance with ASTM Designation: A 153, Class D
   b. Electro-galvanized in accordance with ASTM designation: B 633, Type III, SC 3

"J" ASSEMBLY

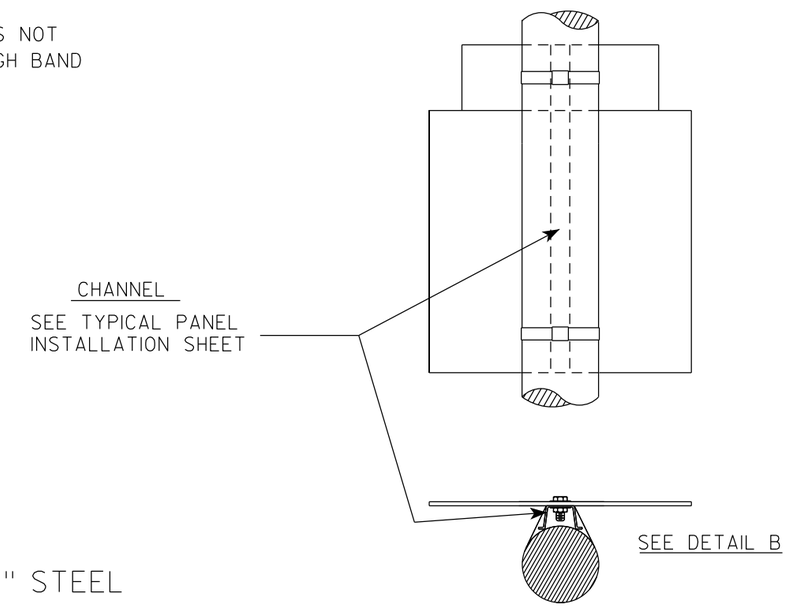

STANDARD SIGN
SIGN BANDING DETAILS

WISCONSIN DEPT OF TRANSPORTATION

APPROVED Matthew R Rauch for State Traffic Engineer

DATE 6/10/19 PLATE NO. A5-9.4

PROJECT NO:	HWY:	COUNTY:		SHEET NO: 41	E

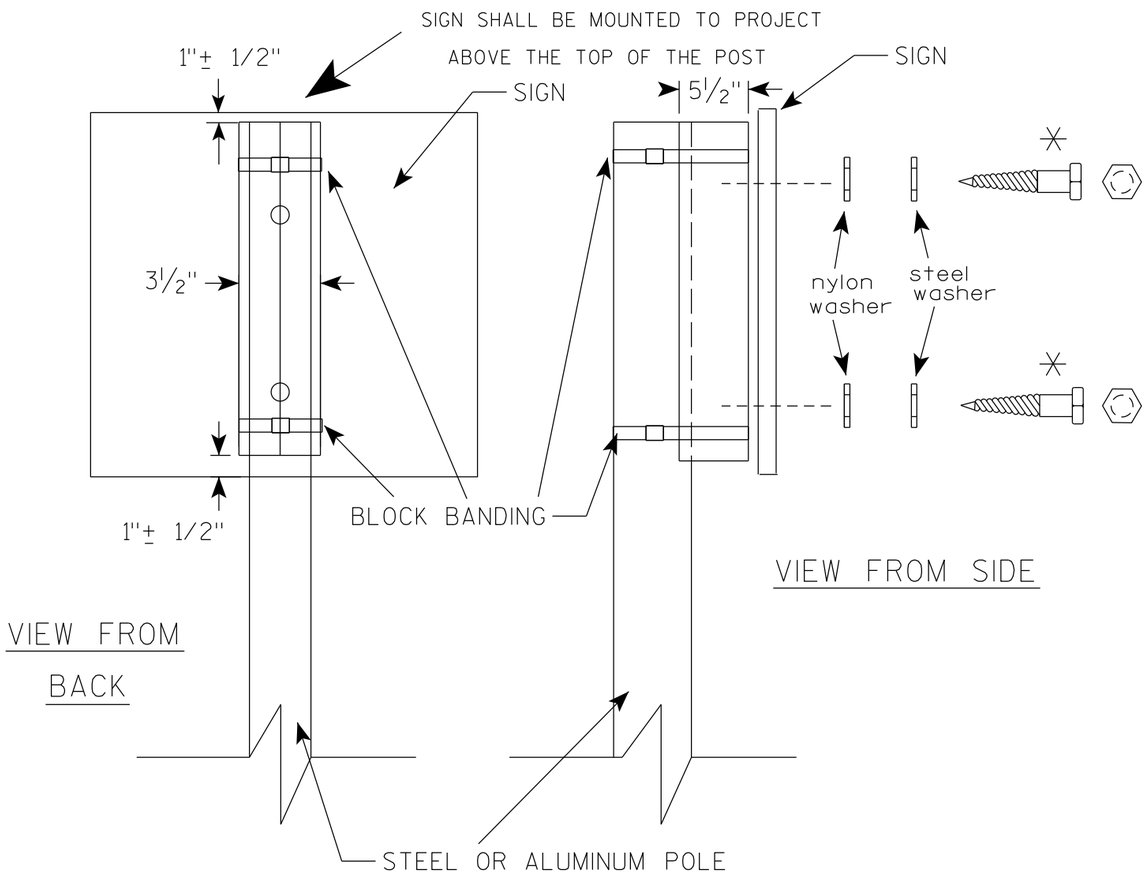

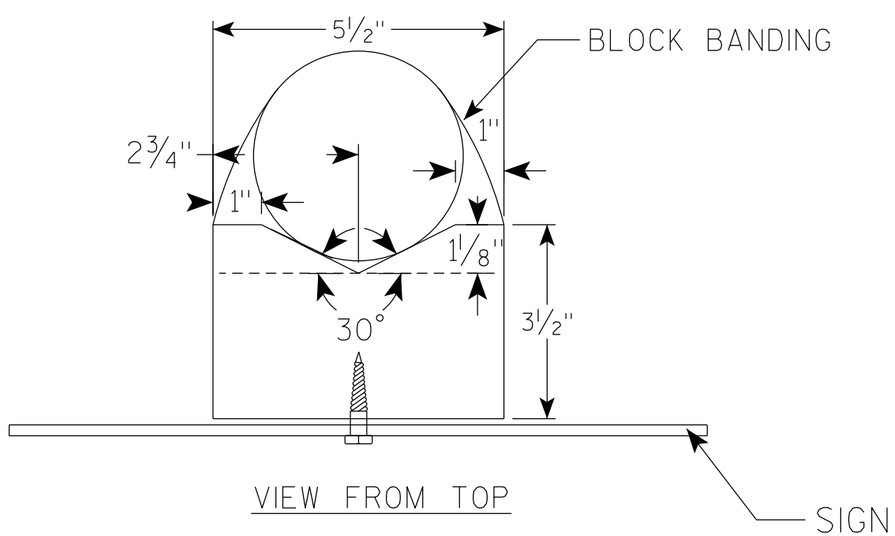

GENERAL NOTES

1. WOOD 4"X6" POST MATERIAL SHALL CONFORM TO 507.2.2 OF THE WisDOT STANDARD SPECIFICATIONS
2. BLOCK BANDING AND CLIPS SHALL BE STAINLESS STEEL, ¾" WIDTH AND 0.025" THICKNESS
3. SIGNS 3' OR GREATER IN HEIGHT SHALL UTILIZE 3 BLOCK BANDS. SIGNS UNDER 3' IN HEIGHT SHALL UTILIZE 2 BLOCK BANDS
4. ACTUAL NUMBER OF FASTENERS PER SIGN VARIES WITH THE SIGN AREA, BUT NORNALLY THERE ARE TWO. FOR SIGNS GREATER THAN 9 S.F. 3 FASTENERS SHALL BE USED.
5. ALL SIGN MOUNTING BOLTS AND WASHERS SHALL BE EITHER:
   a. Hot dip or mechanically galvanized in accordance with ASTM Designation: A 153, Class D
   b. Electro-galvanized in accordance with ASTM Designation : B 633, TYPE III, SC 3
6. ALL BOLTS SHALL HAVE HEXAGONAL HEADS.
7. STEEL WASHERS SHALL BE 1¼" O.D. X ⅜" I.D. X 1/16"
8. NYLON WASHERS SHALL BE 1¼" O.D. X ⅜" I.D. X .080 FOR TYPE H OR TYPE F FACE SIGN

✳ LAG BOLTS SHALL BE ⅜" X 2½"

BLOCK BANDING DETAIL
(V-BLOCK OPTION)

WISCONSIN DEPT OF TRANSPORTATION

APPROVED Matthew R Rauch
For State Traffic Engineer

DATE 6/10/19 PLATE NO. A5-10.2

PROJECT NO:				SHEET NO: 42	E

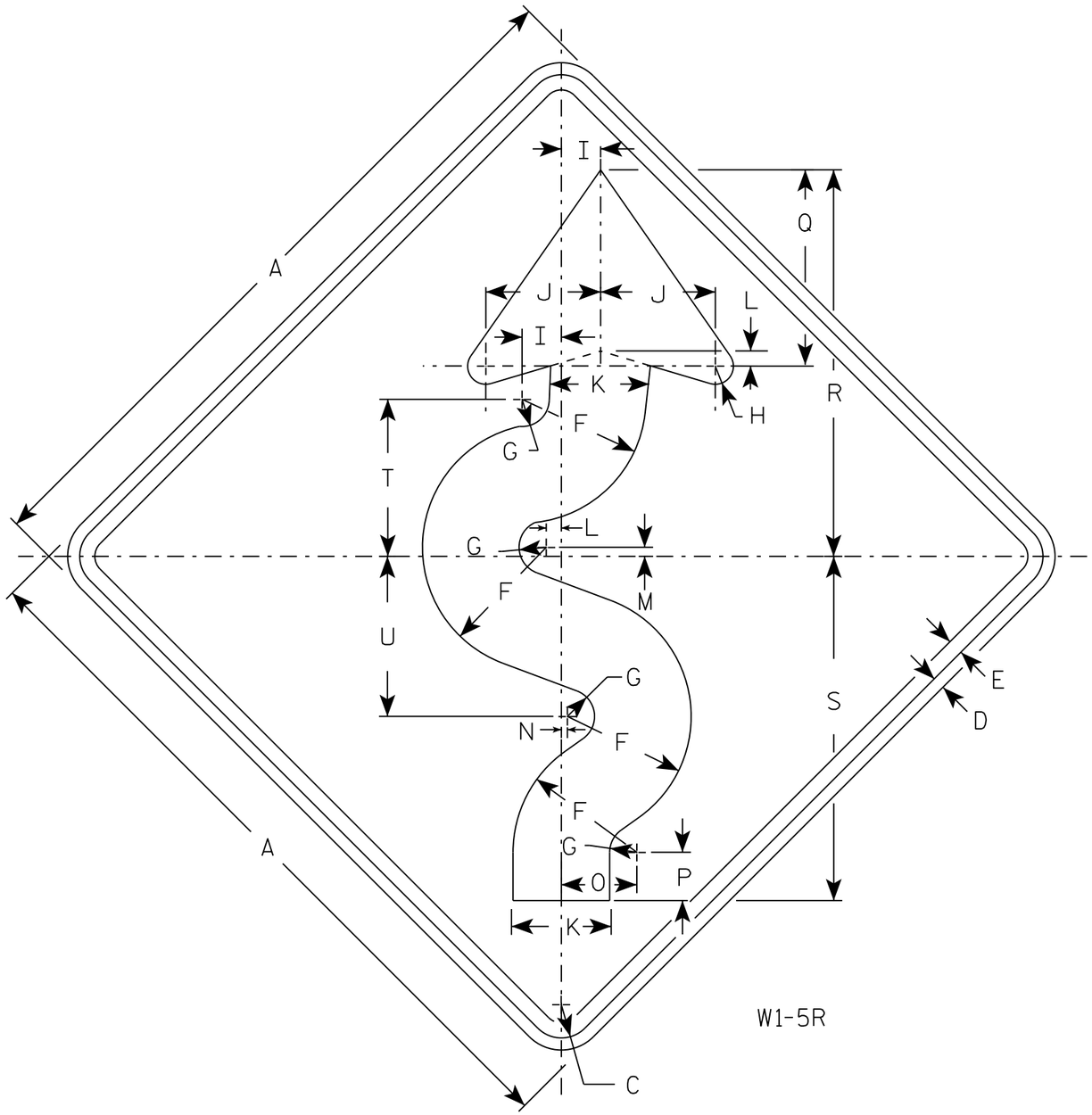

W1-5R

NOTES

1. Sign is Type II - Type F Reflective
2. Color:
   Background - Yellow
   Message - Black
3. W1-5L is the same as W1-5R except the arrow is reversed along the vertical centerline.
4. If used with W13-1 of 30 MPH or less, use 36" sign for Size 2S.

SIZE	A	B	C	D	E	F	G	H	I	J	K	L	M	N	O	P	Q	R	S	T	U	V	W	X	Y	Z	Area sq. ft.
1	24		1 1/8	3/8	1/2	4 1/8	7/8	5/8	1 1/4	3 3/4	3 1/4	1/2	1/4	1/8	2 1/2	1 5/8	6 1/2	12 3/4	11 3/8	5 1/4	5 1/4						4.0
2S	30		1 3/8	1/2	5/8	5 1/8	1 1/8	3/4	1 5/8	4 3/4	4 1/8	5/8	3/8	1/4	3 1/8	2	8 1/8	16	14 1/4	6 1/2	6 5/8						6.25
2M	36		1 5/8	5/8	3/4	6 1/4	1 3/8	1	1 7/8	5 5/8	4 7/8	3/4	3/8	1/4	3 3/4	2 7/8	9 3/4	19 1/8	17 1/8	7 3/4	7 7/8						9.0
3	36		1 5/8	5/8	3/4	6 1/4	1 3/8	1	1 7/8	5 5/8	4 7/8	3/4	3/8	1/4	3 3/4	2 7/8	9 3/4	19 1/8	17 1/8	7 3/4	7 7/8						9.0
4	36		1 5/8	5/8	3/4	6 1/4	1 3/8	1	1 7/8	5 5/8	4 7/8	3/4	3/8	1/4	3 3/4	2 7/8	9 3/4	19 1/8	17 1/8	7 3/4	7 7/8						9.0
5	48		2 1/4	3/4	1	8 1/4	1 3/4	1 1/4	2 1/2	7 1/2	6 1/2	1	1/2	3/8	5	3 1/4	13	25 1/2	22 3/4	10 3/8	10 1/2						16.0

STANDARD SIGN
W1-5

WISCONSIN DEPT OF TRANSPORTATION

APPROVED Matthew R Rauch for State Traffic Engineer

DATE 8/1/16 PLATE NO W1-5.9

PROJECT NO: HWY: COUNTY: SHEET NO: E

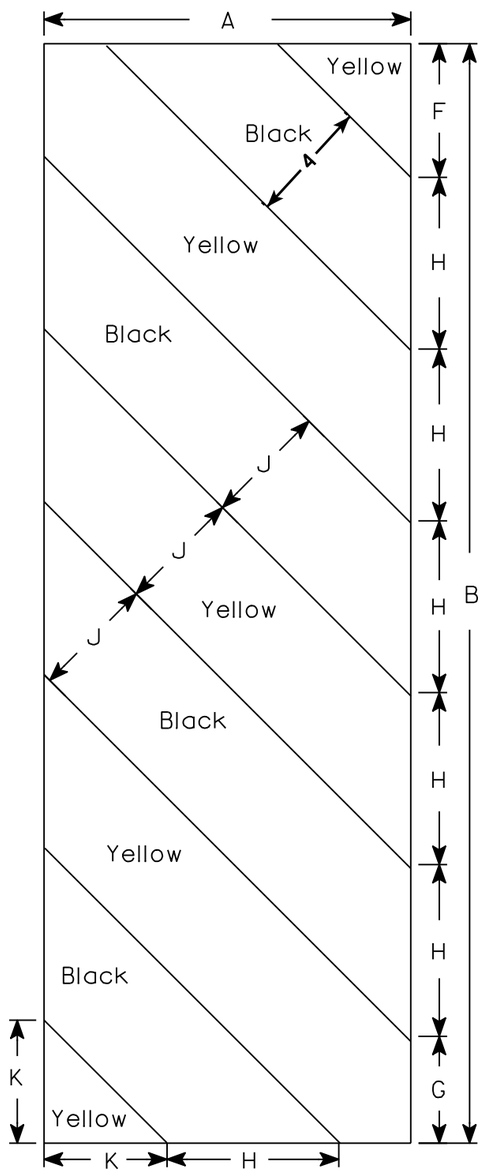

W5-52L

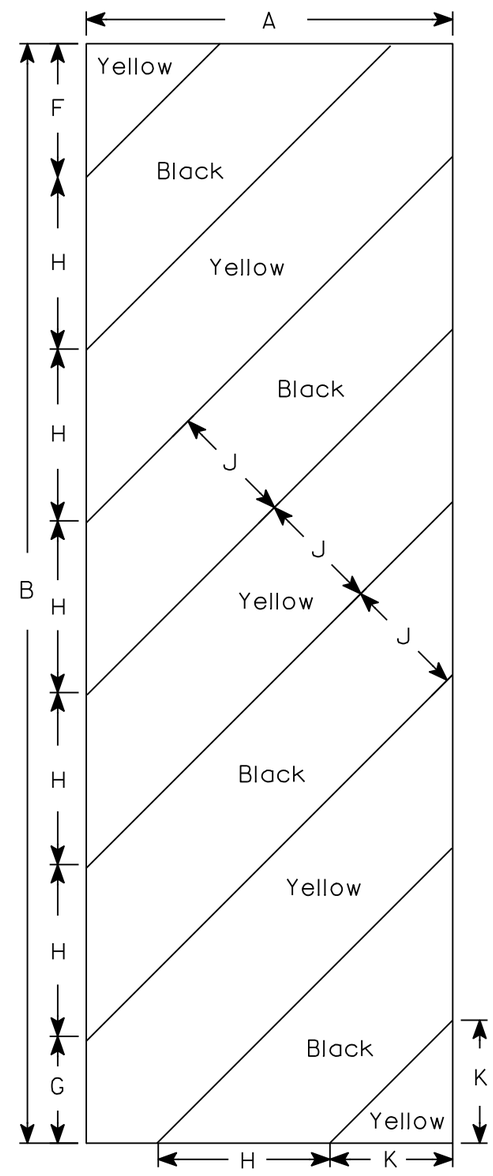

W5-52R

NOTES

1. Sign is Type II - Type F Reflective - reference WIS DOT Standard Specification for HIGHWAY and STRUCTURE CONSTRUCTION latest edition.
2. Color:
   Background - Yellow
   Message - Black
3. Corners may be square or rounded when base material is plywood but borders shall be rounded as shown. When base material is metal, the corners and borders shall be rounded.
4. Alternate colors of stripes as shown.

SIZE	A	B	C	D	E	F	G	H	I	J	K	L	M	N	O	P	Q	R	S	T	U	V	W	X	Y	Z	Area sq. ft.
1																											
2S	12	36				4 3/8	3 1/2	5 5/8	45°	4	4																3.0
2M	12	36				4 3/8	3 1/2	5 5/8	45°	4	4																3.0
3	18	54				6	5 1/2	8 1/2	45°	6	6 9/16																6.75
4																											
5																											

STANDARD SIGN
W5-52L & W5-52R

WISCONSIN DEPT OF TRANSPORTATION

APPROVED Matthew R Rauch
for State Traffic Engineer

DATE 5/29/12 PLATE NO. W5-52.9

PROJECT NO: | HWY: | COUNTY: | SHEET NO: 44 | E

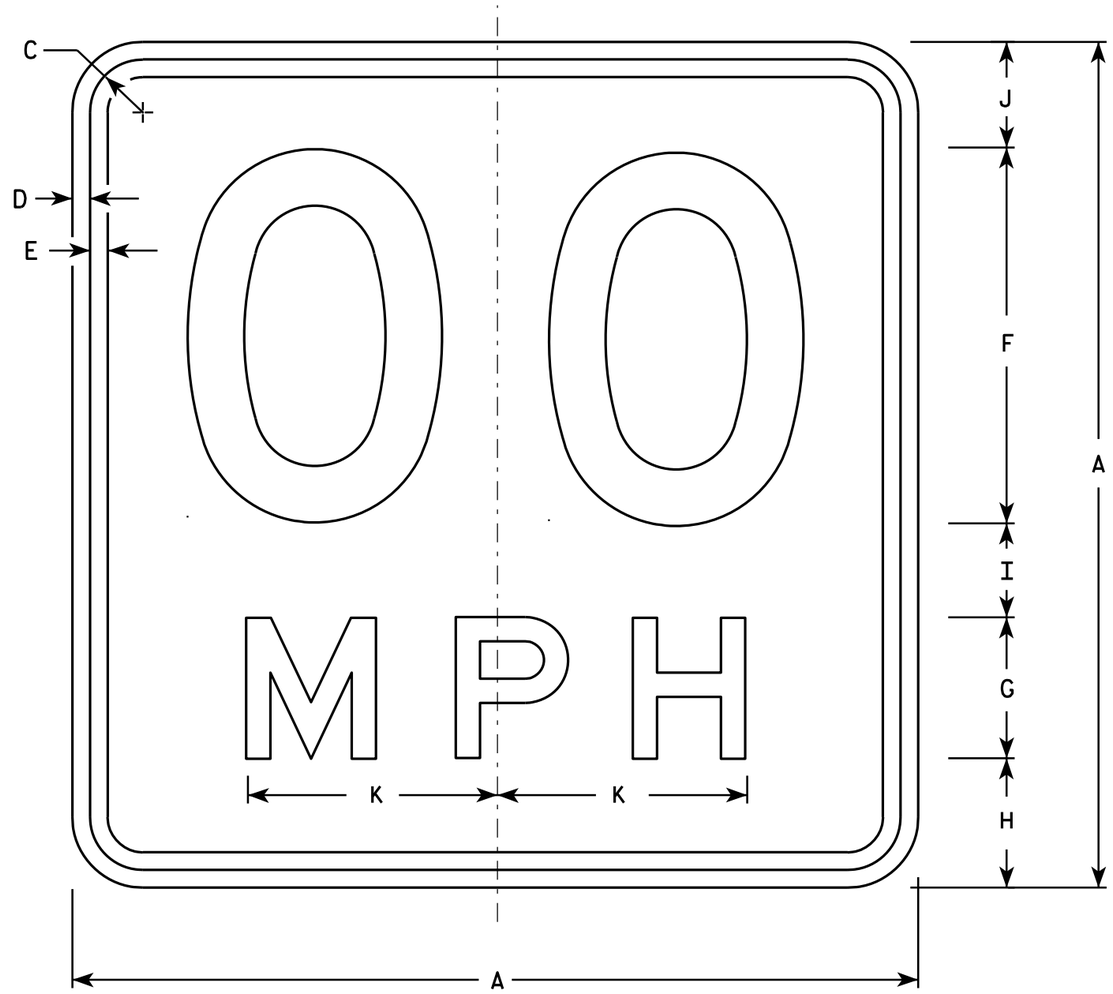

W13-1

* For 30" x 30" Warning Signs, use 18" x 18" W13-1 signs.
For 36" x 36" Warning Signs, use 24" x 24" W13-1 signs.

NOTES

1. Sign is Type II - Type F Reflective - reference WIS DOT Standard Specification for HIGHWAY and STRUCTURE CONSTRUCTION latest edition.
2. Color:
   Background - Yellow
   Message - Black
3. Message Series - See Note 6
4. Corners may be square or rounded when base material is plywood but borders shall be rounded as shown. When base material is metal, the corners and borders shall be rounded.
5. Substitute appropriate numerals and optically space about centerline to achieve proper balance.
6. Line 1 is Series D
   Line 2 is Series E

SIZE	A	B	C	D	E	F	G	H	I	J	K	L	M	N	O	P	Q	R	S	T	U	V	W	X	Y	Z	Area sq. ft.
1	18		1 1/8	3/8	3/8	8	3	2 3/4	2	2 1/4	5 3/8																2.25
* 2S	18		1 1/8	3/8	3/8	8	3	2 3/4	2	2 1/4	5 3/8																2.25
* 2M	18		1 1/8	3/8	3/8	8	3	2 3/4	2	2 1/4	5 3/8																2.25
3	24		1 1/8	3/8	1/2	10	4	4	2 3/4	3 1/4	6 5/8																4.00
4	36		1 5/8	5/8	3/4	16	6	5 1/2	4	4 1/2	10 5/8																9.00
5	36		1 5/8	5/8	3/4	16	6	5 1/2	4	4 1/2	10 5/8																9.00

STANDARD SIGN
W13-1

WISCONSIN DEPT OF TRANSPORTATION

APPROVED Matthew R Rauch
For State Traffic Engineer

DATE 5/31/12 PLATE NO. W13-1.16

PROJECT NO:	HWY:	COUNTY:		SHEET NO: 45	E

STATE PROJECT NUMBER

7361-00-70

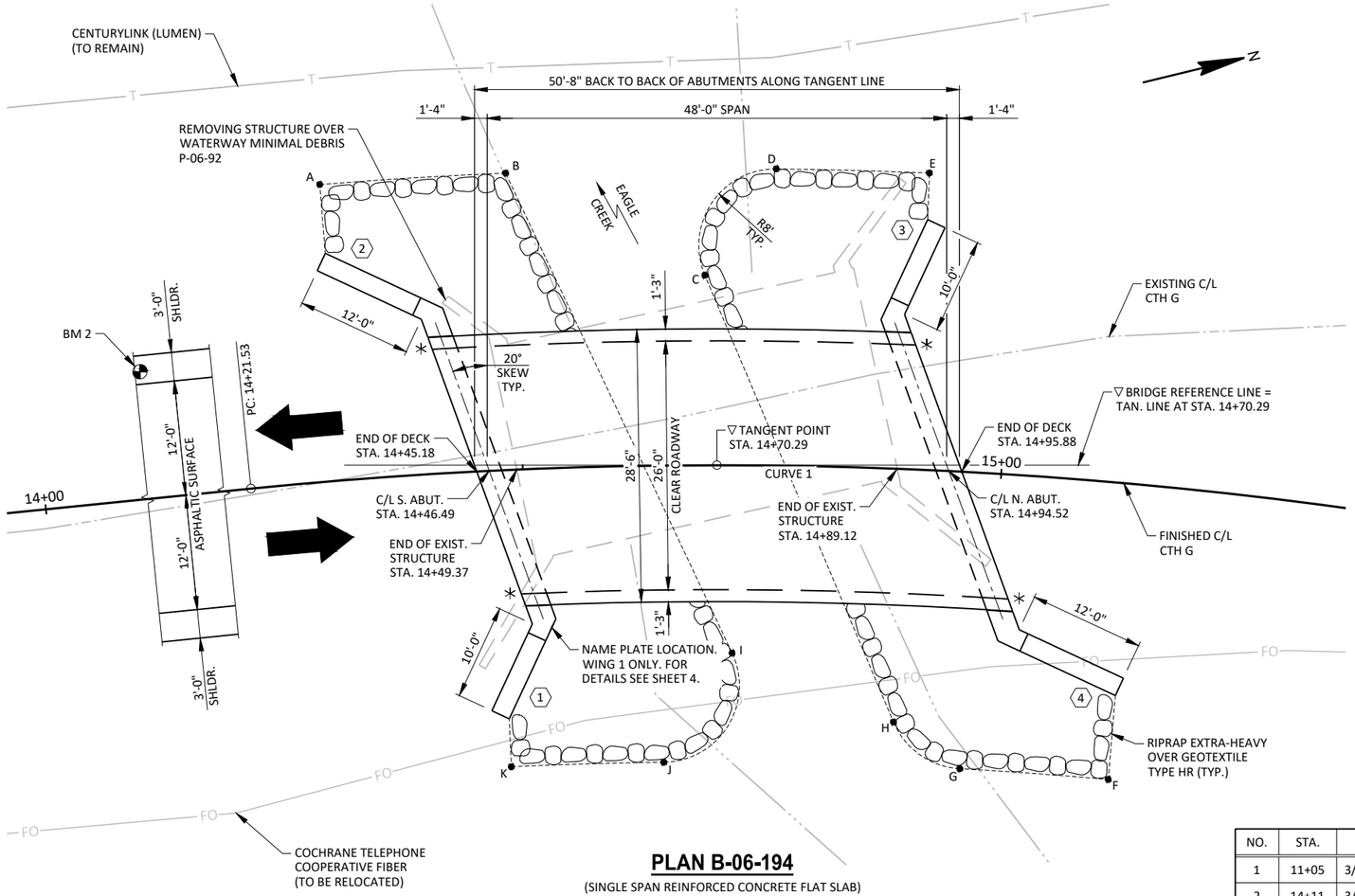

PLAN B-06-194

(SINGLE SPAN REINFORCED CONCRETE FLAT SLAB)

RIPRAP HEAVY LAYOUT

POINT	STATION	OFFSET
A	14+31	31' LT.
B	14+50	31' LT.
C	14+69	20' LT.
D	14+76	31' LT.
E	14+91	31' LT.
F	15+11	31' RT.
G	14+97	31' RT.
H	14+90	26' RT.
I	14+72	20' RT.
J	14+64	31' RT.
K	14+47	31' RT.

CURVE 1

PI STA. = 15+59.02
Y = 248,771.77
X = 598,469.31
R = 485.00
D = 11°48'49"
DELTA = 31°39'14"
L = 267.94
T = 137.49
C = 264.55
PC STA. = 14+21.53
Y = 248,635.59
X = 598,450.34
PT STA. = 16+89.48
Y = 248,877.72
X = 598,556.92
S.E. = 6.0%

LEGEND

- ⬡ INDICATES WING NUMBER
- ▽ SEE SHEET 2 FOR OFFSET DETAILS
- ✳ THRIE BEAM RAIL ATTACHMENT

BENCH MARKS

NO.	STA.	DESCRIPTION	ELEV.
1	11+05	3/4" IRON REBAR SET, 18.5' LT.	720.89
2	14+11	3/4" IRON REBAR SET, 13.3' LT.	702.86
3	18+00	3/4" IRON REBAR SET, 37.3' RT.	715.27
4	13+40	COTTON GIN SPINDLE IN PPOL, 24.1' RT.	705.43

DESIGN DATA

LIVE LOAD:

DESIGN LOADING ____ HL-93
INVENTORY RATING FACTOR ____ RF=1.17
OPERATING RATING FACTOR ____ RF=1.51
WISCONSIN STANDARD PERMIT VEHICLE (WIS-SPV) ____ 250 KIPS

STRUCTURE IS DESIGNED FOR A FUTURE WEARING SURFACE OF 20 P.S.F.

MATERIAL PROPERTIES:

CONCRETE MASONRY, SUPERSTRUCTURE ____ f'c = 4,000 P.S.I.
ALL OTHER ____ f'c = 3,500 P.S.I.
HIGH-STRENGTH BAR STEEL REINFORCEMENT, GRADE 60 ____ fy = 60,000 P.S.I.

FOUNDATION DATA

ABUTMENTS TO BE SUPPORTED ON PILING STEEL HP 12-INCH X 53 LB DRIVEN TO A REQUIRED DRIVING RESISTANCE OF 170 TONS** PER PILE AS DETERMINED BY THE MODIFIED GATES DYNAMIC FORMULA. ESTIMATE 80 FT PILE LENGTHS AT BOTH ABUTMENTS.

**THE FACTORED AXIAL RESISTANCE OF PILES IN COMPRESSION USED FOR DESIGN IS THE REQUIRED DRIVING RESISTANCE MULTIPLIED BY A RESISTANCE FACTOR OF 0.5 USING MODIFIED GATES TO DETERMINE DRIVEN PILE CAPACITY.

TRAFFIC DATA

A.D.T. (2022) ____ 350
A.D.T. (2042) ____ 520
DESIGN SPEED ____ 30 M.P.H.

HYDRAULIC DATA

100 YEAR FREQUENCY
DRAINAGE AREA ____ 26.7 SQ. MI.
Q_{100} TOTAL ____ 3,930 C.F.S.
THROUGH STRUCTURE ____ 3,930 C.F.S.
OVERTOPPING ROADWAY ____ N/A
VELOCITY - THROUGH STRUCTURE ____ 14.1 F.P.S.
WATERWAY AREA - THROUGH STRUCTURE ____ 278.7 SQ. FT.
HIGH $WATER_{100}$ ELEVATION ____ 701.80
SCOUR CRITICAL CODE ____ 5

EROSION CONTROL
Q_2 ____ 610 C.F.S.
$VELOCITY_2$ ____ 4.6 F.P.S.
HIGH $WATER_2$ ELEVATION ____ 695.86

LIST OF DRAWINGS

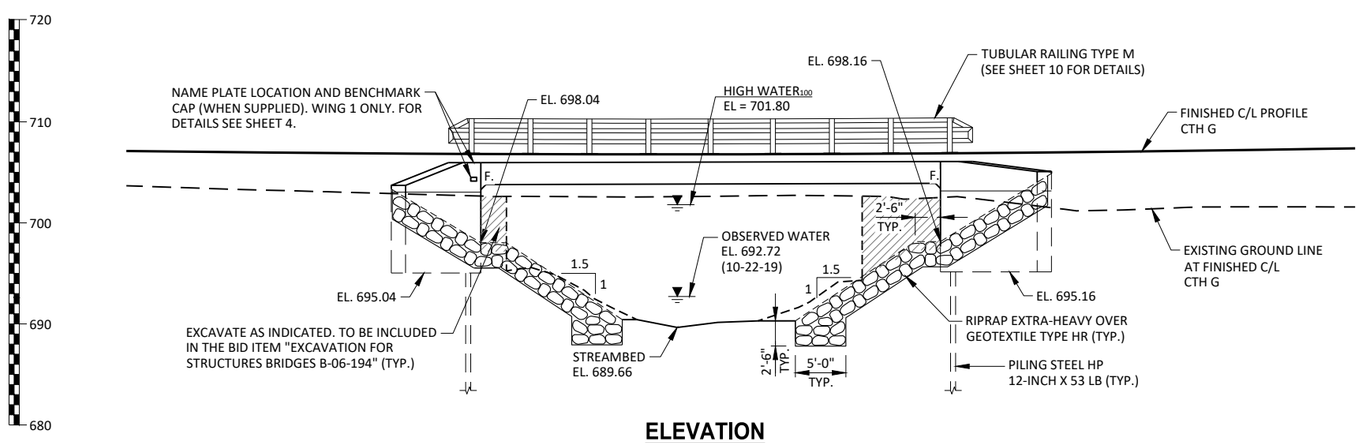

ELEVATION

(NORMAL TO EAGLE CREEK)

WISCONSIN PROFESSIONAL ENGINEER
PATRICK T. BOLAND
E-36303
HILLPOINT, WIS.
Patrick Boland 7-26-21

NO.	DATE	REVISION	BY

JEWELL associates engineers, inc.
Engineers - Architects - Surveyors
560 SUNRISE DRIVE
SPRING GREEN, WI 53588
OFFICE: (608) 588-7484
www.jewellassoc.com

STATE OF WISCONSIN
DEPARTMENT OF TRANSPORTATION

ACCEPTED ____ SDR ____ 08/06/21
CHIEF STRUCTURES DESIGN ENGINEER ____ DATE

STRUCTURE B-06-194

CTH G OVER EAGLE CREEK

COUNTY: BUFFALO | TOWN/~~CITY/VILLAGE~~: MILTON
DESIGN SPEC.: AASHTO LRFD BRIDGE DESIGN SPECIFICATIONS

DESIGNED BY	PTB	DESIGN CK'D.	RBH	DRAWN BY	PTB	PLANS CK'D.	RBH

GENERAL PLAN

SHEET 1 OF 10

46

DESIGN CONSULTANT
PATRICK BOLAND, PE
(608) 588-7484

BRIDGE OFFICE CONTACT
AARON BONK, PE
(608) 261-0261

8

STATE PROJECT NUMBER
7361-00-70

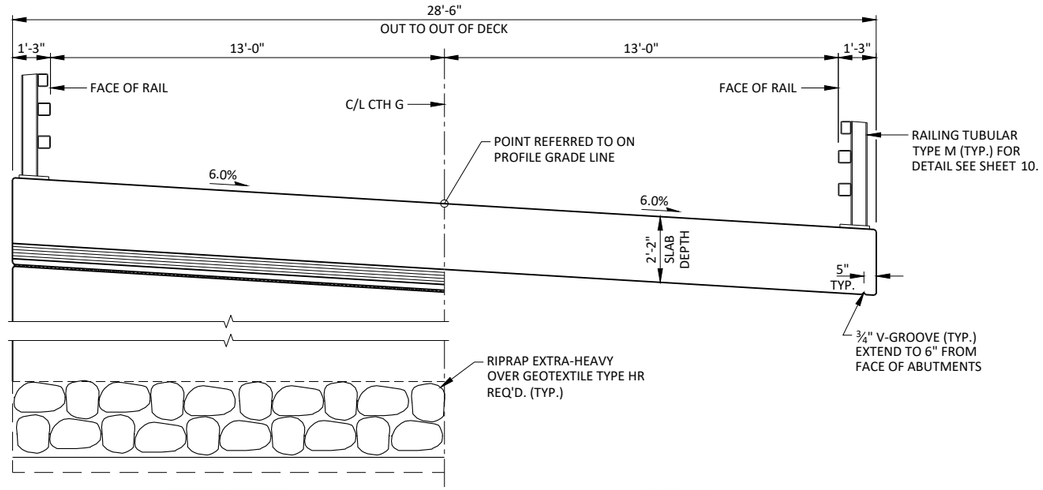

AT ABUTMENT **IN SPAN**

PROPOSED CROSS-SECTION THROUGH ROADWAY

LOOKING NORTH

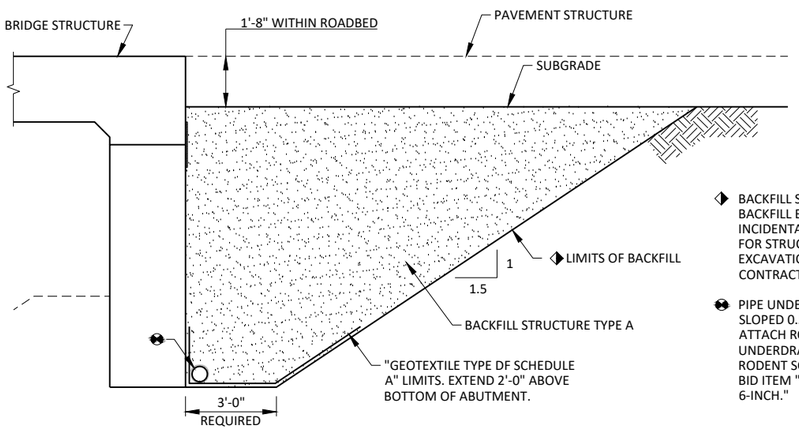

BACKFILL STRUCTURE TYPE A PAY LIMITS. BACKFILL BEYOND PAY LIMITS SHALL BE INCIDENTAL TO THE BID ITEM "EXCAVATION FOR STRUCTURES B-06-194". LIMITS OF EXCAVATION SHALL BE DETERMINED BY THE CONTRACTOR.

PIPE UNDERDRAIN WRAPPED (6-INCH), SLOPED 0.5% MIN. TO SUITABLE DRAINAGE. ATTACH RODENT SCREEN AT ENDS OF PIPE UNDERDRAIN AS DETAILED ON THIS SHEET. RODENT SCREEN TO BE INCLUDED IN THE BID ITEM "PIPE UNDERDRAIN WRAPPED 6-INCH."

BACKFILL STRUCTURE DETAIL

(TYPICAL AT ABUTMENTS. ABUTMENT BODY SHOWN - WING WALLS SIMILAR)

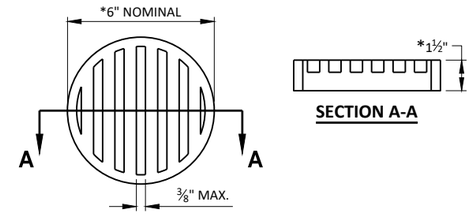

SECTION A-A

RODENT SCREEN

NOTES:

* DIMENSIONS ARE APPROXIMATE. THE GRATE IS SIZED TO FIT INTO A PIPE COUPLING.

ORIENT SHIELD SO SLOTS ARE VERTICAL.

THE RODENT SCREEN, PIPE COUPLING AND SCREWS SHALL BE CONSIDERED INCIDENTAL TO THE BID ITEM "PIPE UNDERDRAIN WRAPPED 6-INCH".

THE RODENT SCREEN SHALL BE A PVC GRATE SIMILAR TO THIS DETAIL. THE GRATE IS COMMERCIALLY AVAILABLE AS A FLOOR STRAINER. A PIPE COUPLING IS REQUIRED FOR THE ATTACHMENT OF THIS SCREEN TO THE EXPOSED ENDS OF THE PIPE UNDERDRAIN. THE SCREEN SHALL BE FASTENED TO THE PIPE COUPLING WITH TWO OR MORE NO. 10 X 1-INCH STAINLESS STEEL SHEET METAL SCREWS.

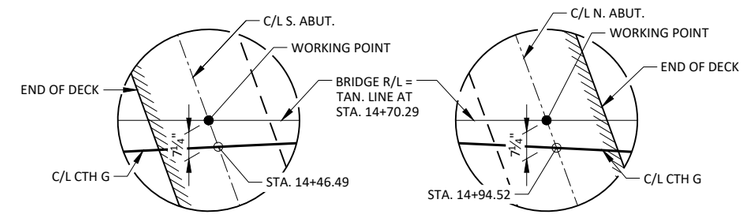

SOUTH ABUTMENT **NORTH ABUTMENT**

TANGENT OFFSET DETAILS

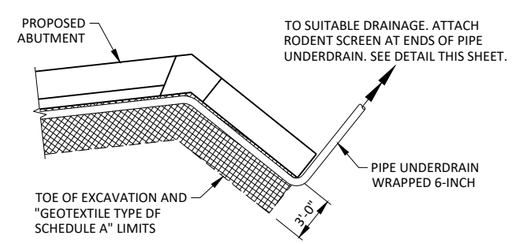

PIPE UNDERDRAIN DETAIL

GENERAL NOTES

DRAWINGS SHALL NOT BE SCALED.

ELEVATIONS SHOWN ON THE PLAN ARE REFERENCED TO THE NORTH AMERICA VERTICAL DATUM OF 1988 (NAVD 88).

BAR STEEL REINFORCEMENT SHALL BE EMBEDDED 2" CLEAR UNLESS OTHERWISE SHOWN OR NOTED.

JOINT FILLER SHALL CONFORM TO A.A.S.H.T.O. DESIGNATION MI53, TYPE I, II OR III OR A.A.S.H.T.O. DESIGNATION M213.

THE SLOPE OF FILL IN FRONT OF THE ABUTMENTS SHALL BE COVERED WITH RIPRAP EXTRA-HEAVY AND GEOTEXTILE TYPE HR TO THE EXTENT SHOWN ON SHEET 1 AND IN THE ABUTMENT DETAILS, OR AS DIRECTED BY THE ENGINEER IN THE FIELD.

AT THE BACK FACE OF ABUTMENTS, ALL VOLUME WHICH CANNOT BE PLACED BEFORE ABUTMENT CONSTRUCTION AND IS NOT OCCUPIED BY THE NEW STRUCTURE SHALL BE BACKFILLED WITH BACKFILL STRUCTURE TYPE A. SEE THIS SHEET FOR DETAIL.

ANY EXCAVATION BELOW THE ABUTMENT AND ASSOCIATED ABUTMENT BEDDING MATERIALS REQUIRE THE APPROVAL OF THE ENGINEER IN THE FIELD.

APPLY PROTECTIVE SURFACE TREATMENT TO THE TOP OF THE DECK, THE SIDES OF THE DECK AND EXTERIOR 12" OF THE UNDERSIDE OF THE DECK (CONCRETE MATERIAL ONLY).

ALL STATIONS AND ELEVATIONS SHOWN ARE IN FEET.

THE EXISTING GROUNDLINE SHALL BE THE UPPER LIMITS OF EXCAVATION FOR STRUCTURES.

SLAB FALSEWORK SHALL BE SUPPORTED ON PILES OR THE SUBSTRUCTURE UNLESS AN ALTERNATIVE METHOD IS APPROVED BY THE ENGINEER IN THE FIELD.

THE FIRST DIGIT OF A THREE DIGIT BAR MARK OR THE FIRST TWO DIGITS OF A FOUR DIGIT BAR MARK SIGNIFIES THE BAR SIZE.

THE EXISTING STRUCTURE (P-06-92) IS A REINFORCED CONCRETE DECK GIRDER STRUCTURE WITH A CONCRETE DECK SUPPORTED ON CONCRETE ABUTMENTS. THE STRUCTURE HAS A OVERALL WIDTH OF 22.3' AND AN OVERALL LENGTH OF 39.0', AND SHALL BE REMOVED.

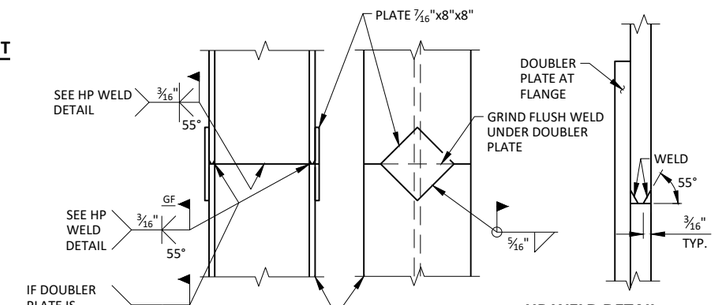

HP WELD DETAIL

FLANGE SHOWN, WEB SIMILAR

PILE SPLICE DETAIL

STEEL "HP" PILE MATERIAL SHALL BE ASTM A 572 GRADE 50.

TOTAL ESTIMATED QUANTITIES

ITEM NUMBER	ITEM DESCRIPTION	UNIT	S. ABUT.	SUPER	N. ABUT.	TOTALS
203.0260	REMOVING STRUCTURE OVER WATERWAY MINIMAL DEBRIS P-06-92	EACH	--	--	--	1
206.1000	EXCAVATION FOR STRUCTURES BRIDGES B-06-194	LS	--	--	--	1
210.1500	BACKFILL STRUCTURE TYPE A	TON	345	--	345	690
502.0100	CONCRETE MASONRY BRIDGES	CY	49	121	49	219
502.3200	PROTECTIVE SURFACE TREATMENT	SY	--	200	--	200
505.0400	BAR STEEL REINFORCEMENT HS STRUCTURES	LB	2,500	--	2,560	5,060
505.0600	BAR STEEL REINFORCEMENT HS COATED STRUCTURES	LB	1,820	21,940	1,810	25,570
513.4061	RAILING TUBULAR TYPE M	LF	--	105	--	105
516.0500	RUBBERIZED MEMBRANE WATERPROOFING	SY	6	--	6	12
550.1120	PILING STEEL HP 12-INCH X 53 LB	LF	560	--	560	1,120
606.0400	RIPRAP EXTRA-HEAVY	CY	130	--	140	270
612.0406	PIPE UNDERDRAIN WRAPPED 6-INCH	LF	80	--	80	160
645.0111	GEOTEXTILE TYPE DF SCHEDULE A	SY	55	--	55	110
645.0120	GEOTEXTILE TYPE HR	SY	180	--	190	370
	NON-BID ITEMS					
	FILLER	SIZE				½" & ¾"
	NAME PLATE					

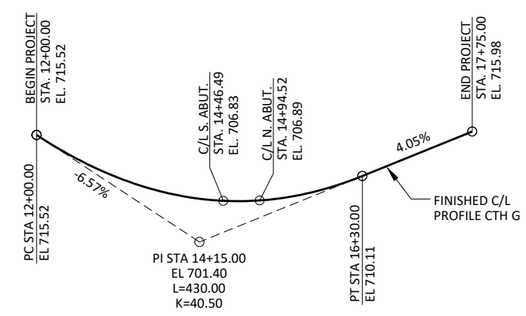

PROFILE GRADE LINE

CTH G

NO.	DATE	REVISION	BY

STATE OF WISCONSIN
DEPARTMENT OF TRANSPORTATION

STRUCTURE B-06-194

DRAWN BY PTB PLANS CK'D. RBH

CROSS SECTION AND QUANTITIES

SHEET 2 OF 10

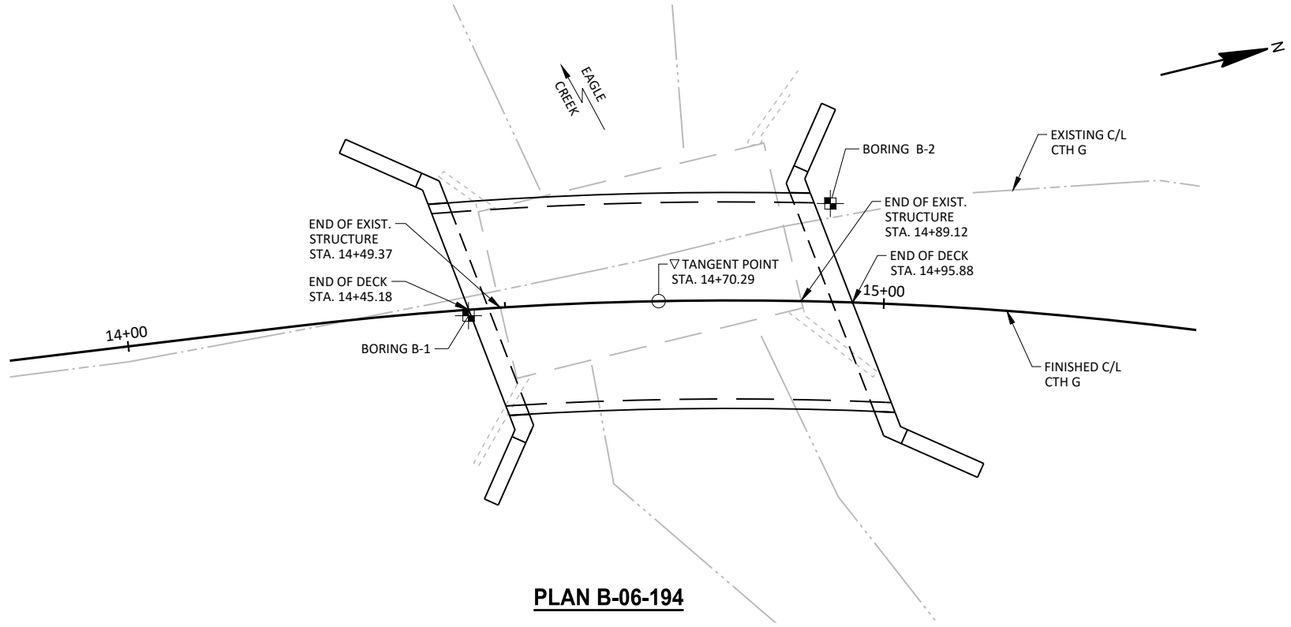

PLAN B-06-194

SOIL BORINGS

BORING NUMBER	DATE COMPLETED	NORTHING (Y)	EASTING (X)
B-1	07/07/20	248,658.7	598,454.9
B-2	07/07/20	248,708.7	598,452.8

BORINGS & REPORT COMPLETED BY: AMERICAN ENGINEERING TESTING, INC. 4203 SCHOFIELD AVENUE, SUITE 1 SCHOFIELD, WI 54476

STATE PROJECT NUMBER

7361-00-70

MATERIAL SYMBOLS

Asphalt, Topsoil, Peat, Concrete, Fill, Gravel, Sand, Clay, Silt, Boulders or Cobbles, Limestone, Bedrock (unknown), Shale, Sandstone, Igneous/ meta

LEGEND OF BORING

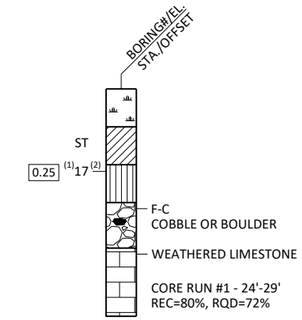

(1) UNCONFINED STRENGTH, AS DETERMINED BY A POCKET PENETROMETER (TSF)

(2) UNLESS OTHERWISE SPECIFIED, THE SPT 'N' VALUE IS BASED ON AASHTO T-206 STANDARD PENETRATION TEST. THE SPT 'N' VALUE PRESENTED HAS NOT BEEN CORRECTED FOR OVERBURDEN PRESSURE OR HAMMER EFFICIENCY.

GROUND WATER ELEVATIONS

AT TIME OF DRILLING

END OF DRILLING

AFTER DRILLING

ABBREVIATIONS

F-FINE M-MEDIUM C-COURSE ST-SHELBY TUBE

SUBSURFACE EXPLORATION FOR FOUNDATION DESIGN AND BIDDERS INFORMATION

BORINGS WERE COMPLETED AT POINTS APPROXIMATELY AS INDICATED ON THIS DRAWING TO OBTAIN INFORMATION CONCERNING THE CHARACTER OF SUBSURFACE MATERIALS FOUND AT THE SITE. BECAUSE THE INVESTIGATED DEPTHS ARE LIMITED AND THE AREA OF THE BORINGS IS VERY SMALL IN RELATION TO THE ENTIRE SITE, THE WISCONSIN DEPARTMENT OF TRANSPORTATION DOES NOT WARRANT SIMILAR SUBSURFACE CONDITIONS BELOW, BETWEEN, OR BEYOND THESE BORINGS. VARIATIONS IN SOIL CONDITIONS SHOULD BE EXPECTED AND FLUCTUATIONS IN GROUNDWATER LEVELS MAY OCCUR.

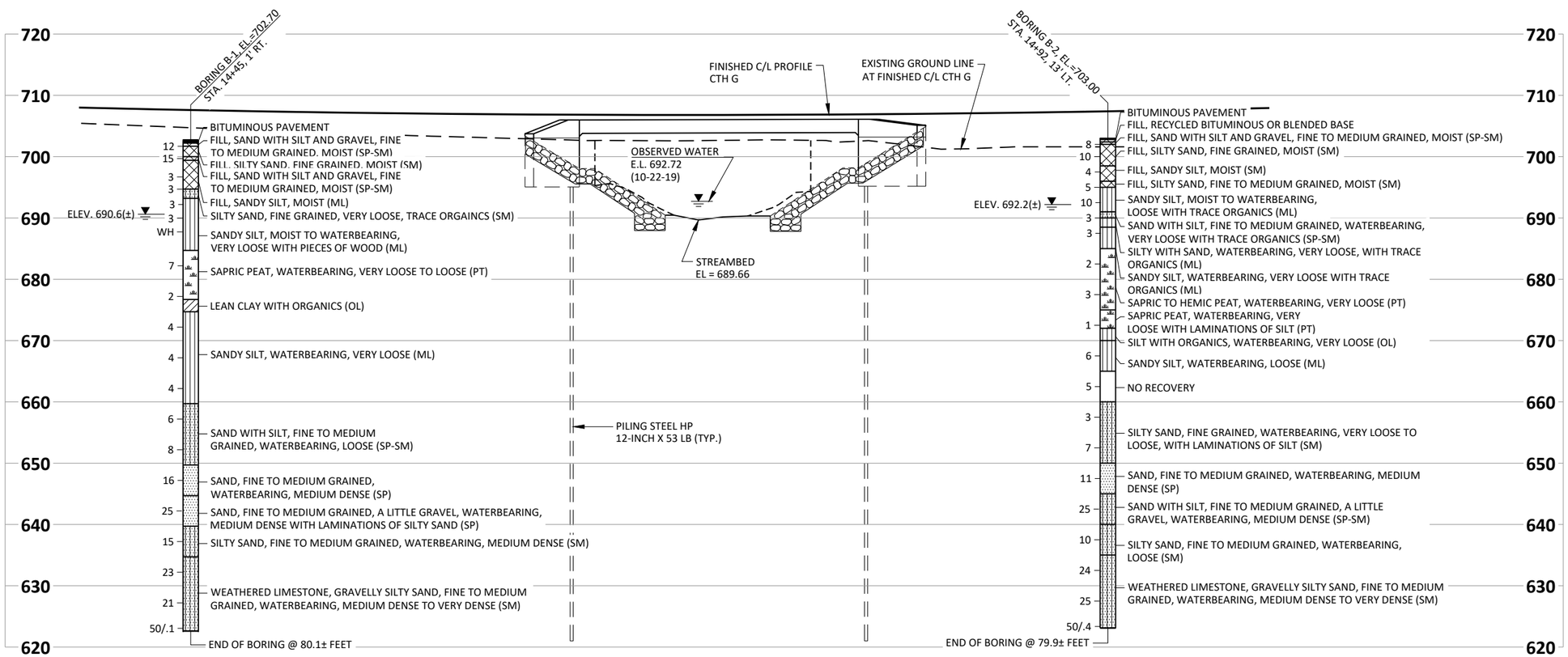

8

8

NO.	DATE	REVISION	BY

STATE OF WISCONSIN
DEPARTMENT OF TRANSPORTATION

STRUCTURE B-06-194

DRAWN BY PTB PLANS CK'D. RBH

SUBSURFACE EXPLORATION

SHEET 3 OF 10

48

STATE PROJECT NUMBER
7361-00-70

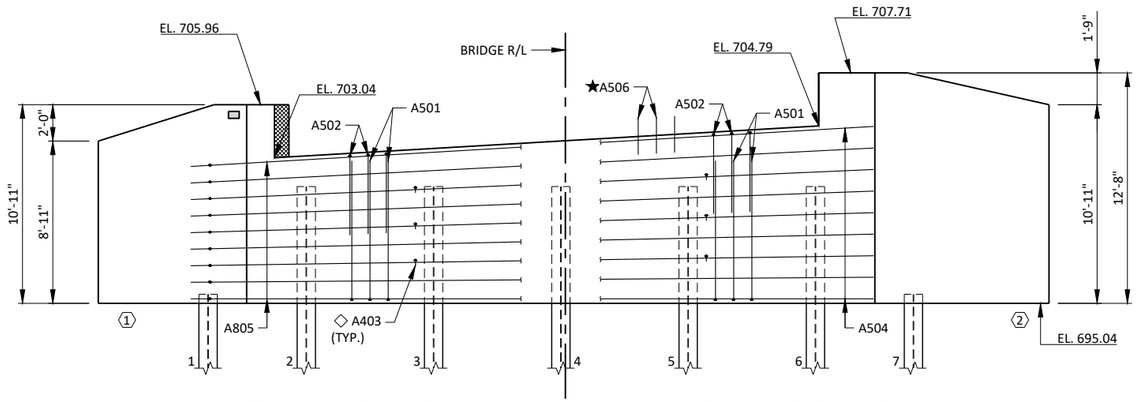

BACK FACE BAR STEEL REINF. **FRONT FACE BAR STEEL REINF.**

ELEVATION

(SOUTH ABUTMENT LOOKING SOUTH)

NOTES

SOME BARS HAVE BEEN OMITTED FOR CLARITY. SEE SHEET 5 FOR BILL OF BARS.

SEAT ELEVATIONS SHOWN IN THE ELEVATION VIEW ARE TAKEN AT THE C/L OF BEARING NEGLECTING THE KEYED CONSTRUCTION JOINT.

DO NOT PLACE FILL HIGHER THAN 3 FEET FROM BOTTOM OF ABUTMENT UNTIL SUPERSTRUCTURE IS IN PLACE.

SPACE REINFORCEMENT TO MISS PILING

F.F. - FRONT FACE

B.F. - BACK FACE

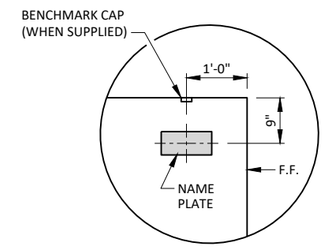

NAME PLATE AND BENCHMARK CAP DETAIL

(WING 1 ONLY)

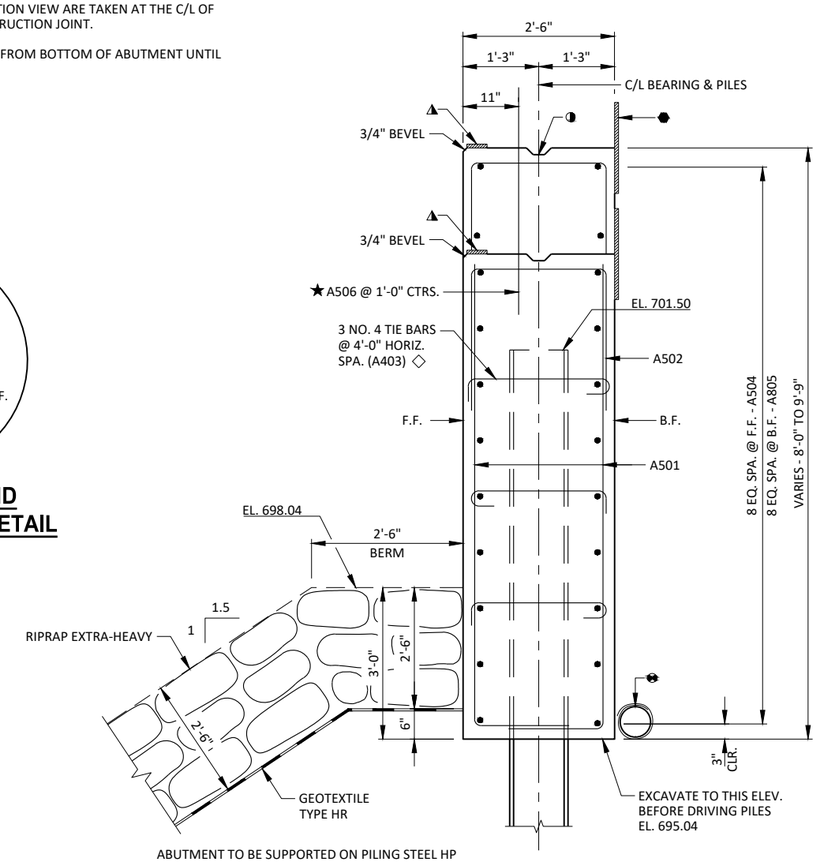

ABUTMENT TO BE SUPPORTED ON PILING STEEL HP 12-INCH X 53 LB DRIVEN TO A REQUIRED DRIVING RESISTANCE OF 170 TONS PER PILE AS DETERMINED BY THE MODIFIED GATES DYNAMIC FORMULA. ESTIMATE 80 FT. PILE LENGTHS AT THE SOUTH ABUTMENT.

TYPICAL SECTION THROUGH ABUTMENT BODY

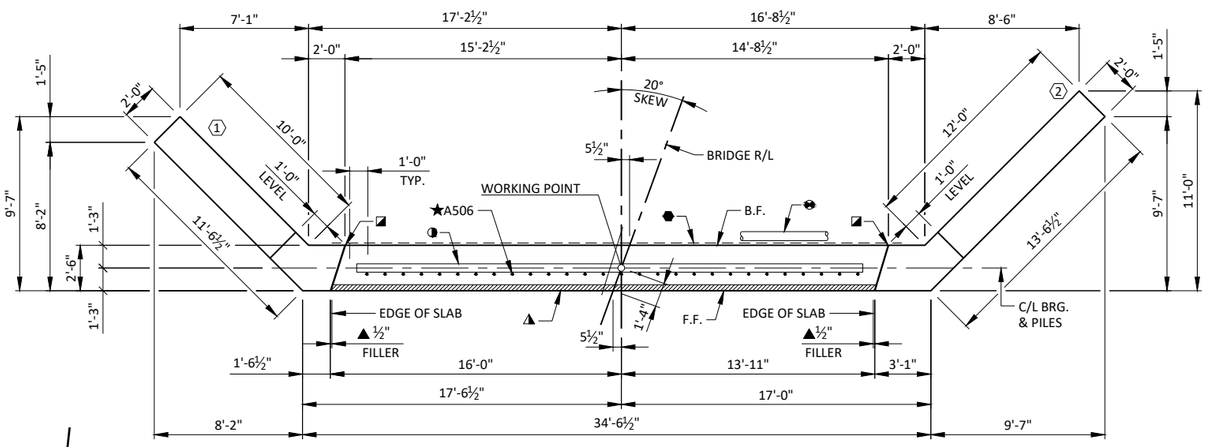

PLAN

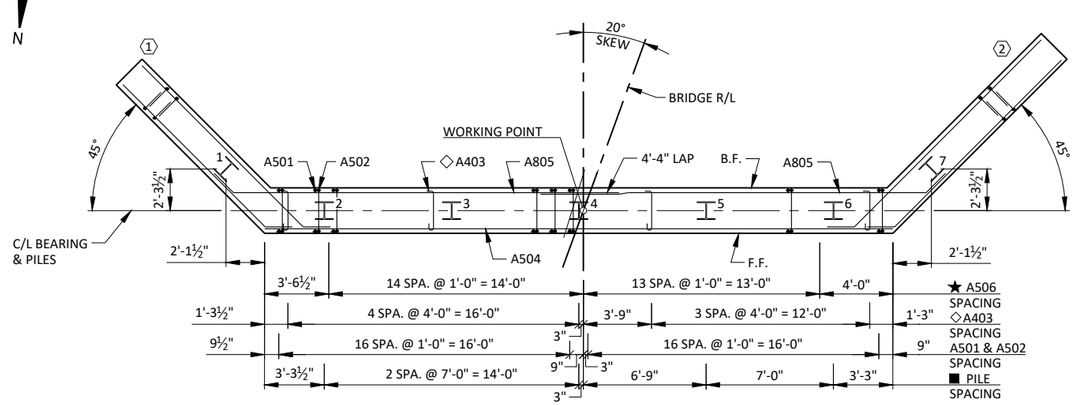

LAYOUT

LEGEND

- ◑ KEYED CONSTRUCTION JOINT FORMED BY SURFACED & BEVELED 2x6.
- ◪ VERTICAL 18" RUBBERIZED MEMBRANE WATERPROOFING EXTEND FROM 9" BELOW BRIDGE SEAT TO 1" BELOW TOP OF WINGS.
- ⬢ 18" RUBBERIZED MEMBRANE WATERPROOFING. (HORIZONTAL)
- ▲ ½" FILLER EXTEND AS SHOWN. SEAL ALL EXPOSED HORIZ. & VERT. SURFACES OF FILLER WITH NON-STAINING GRAY, NON-BITUMINUOS JOINT SEALER. (1" DEEP & HOLD ⅛" BELOW SURFACE OF CONCRETE)
- ◭ ¾" x 4" PREFORMED FILLER, EXTEND FULL LENGTH OF ABUTMENTS BETWEEN EDGES OF SLAB.
- ★ A506 BARS MAY BE PLACED AFTER CONCRETE IS POURED BUT BEFORE IT HAS TAKEN ITS INITIAL SET. EMBED BAR 1'-0".
- ■ PILE SPACING MEASURED AT BASE OF ABUTMENT BODY.
- ⬣ PIPE UNDERDRAIN WRAPPED (6-INCH), SLOPED 0.5% MIN. TO SUITABLE DRAINAGN. ATTACH RODENT SCREEN AT ENDS OF PIPE UNDERDRAIN AS DETAILED ON SHEET 2. RODENT SCREEN TO BE INCLUDED IN THE BID ITEM "PIPE UNDERDRAIN WRAPPED 6-INCH."
- ◇ ALTERNATE THE POSITION OF THE 90° AND THE 180° BENDS AT EACH VERTICAL LAYER OF TIES.

NO.	DATE	REVISION	BY

STATE OF WISCONSIN
DEPARTMENT OF TRANSPORTATION

STRUCTURE B-06-194

DRAWN BY PTB | PLANS CK'D. RBH

SOUTH ABUTMENT

SHEET 4 OF 10

STATE PROJECT NUMBER
7361-00-70

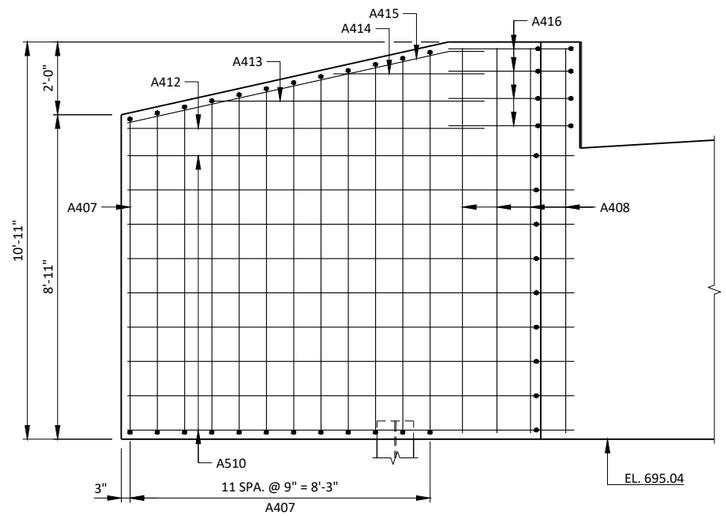

F.F. ELEVATION - WING 1

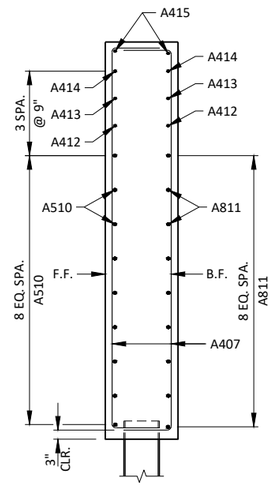

SECTION A-A

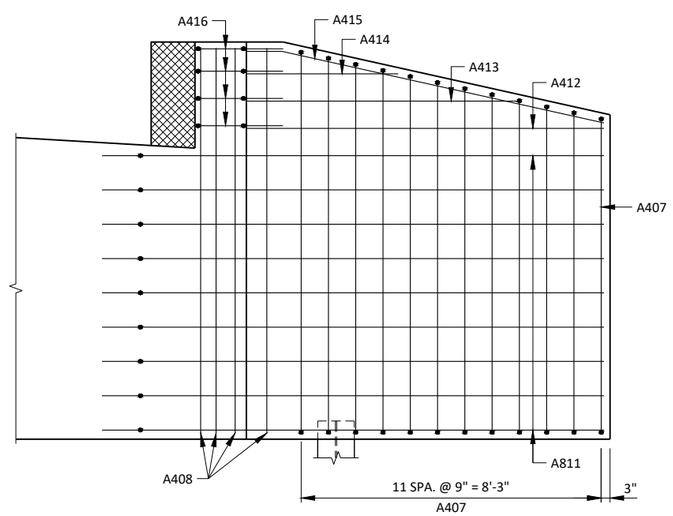

B.F. ELEVATION - WING 1

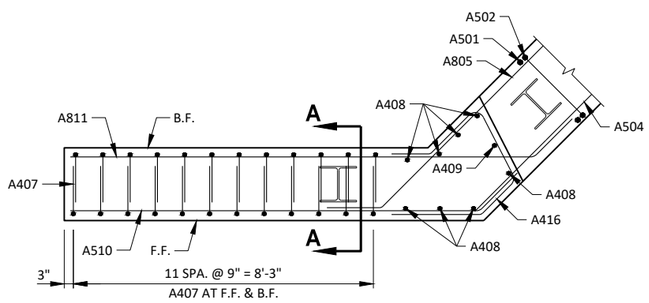

PLAN VIEW - WING 1

NOTES

SOME BARS HAVE BEEN OMITTED FOR CLARITY. SEE THIS SHEET FOR BILL OF BARS.

SPACE REINFORCEMENT TO MISS PILING

F.F. - FRONT FACE

B.F. - BACK FACE

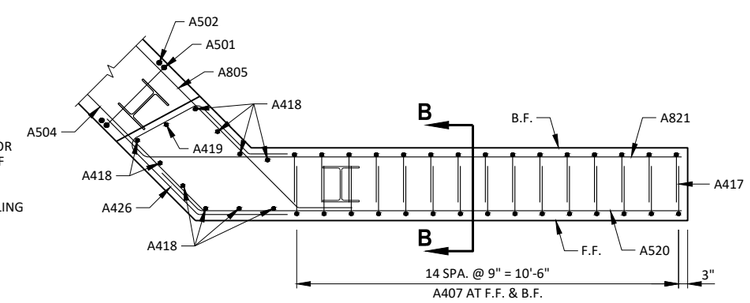

PLAN VIEW - WING 2

BILL OF BARS
SOUTH ABUTMENT

1,820 LB (COATED)
2,500 LB (UNCOATED)

BAR MARK	NO. REQ'D.	LENGTH	BENT	COAT	BAR SERIES	LOCATION
A501	68	9-0	X			BODY - VERT. - F.F & B.F.
A502	34	10-7	X			BODY - VERT. - TOP
A403	27	2-9	X			TIE BARS
A504	9	34-5				BODY - HORIZ. - F.F.
A805	18	23-1	X			BODY - HORIZ. - B.F.
A506	28	2-0		X		BODY - VERT. - DOWELS
A407	24	12-0	X	X	✳	WING 1 - VERT. - F.F. & B.F.
A408	8	10-6		X		WING 1- VERT.
A409	1	3-3		X		WING 1 - VERT. - TOP
A510	9	12-9	X	X		WING 1 - HORIZ. - F.F.
A811	9	14-5	X	X		WING 1- HORIZ. - B.F.
A412	2	9-10		X		WING 1 - HORIZ. - F.F. & B.F. - TOP
A413	2	7-7		X		WING 1 - HORIZ. - F.F. & B.F. - TOP
A414	2	4-2		X		WING 1 - HORIZ. - F.F. & B.F. - TOP
A415	2	10-0	X	X		WING 1 - HORIZ. - F.F. & B.F. - TOP
A416	4	8-8	X	X		WING 1 - HORIZ. - TOP
A417	30	13-11	X	X	✳	WING 2 - VERT. - F.F. & B.F.
A418	10	12-3		X		WING 2- VERT.
A419	1	3-3		X		WING 2 - VERT. - TOP
A520	9	14-9	X	X		WING 2 - HORIZ. - F.F.
A821	9	16-5	X	X		WING 2 - HORIZ. - B.F.
A422	2	11-10		X		WING 2 - HORIZ. - F.F. & B.F. - TOP
A423	2	10-2		X		WING 2 - HORIZ.- F.F & B.F. - TOP
A424	2	5-6				WING 2 - HORIZ. F.F. & B.F.- TOP
A425	2	11-11	X	X		WING 2 - HORIZ. F.F. & B.F.- TOP
A426	4	10-3	X	X		WING 2 HORIZ. F.F. & B.F. - TOP

NOTES: THE FIRST DIGIT OF A BAR MARK SIGNIFIES THE BAR SIZE.

DIMENSIONS IN BENDING DETAILS ARE OUT TO OUT OF BAR.

✳ LENGTH SHOWN IS AN AVERAGE LENGTH ONLY. SEE BAR SERIES TABLE FOR ACTUAL LENGTHS.

BAR SERIES TABLE

BAR MARK	NO. REQ'D.	LENGTH
A407	2 SERIES OF 12	12-11 TO 11-1
A417	2 SERIES OF 15	14-9 TO 13-1

BUNDLE AND TAG EACH SERIES SEPARATELY.

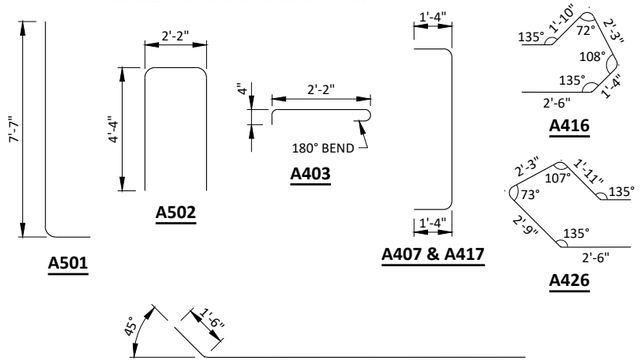

MARK	'A'
A415	167°28'
A425	170°58'

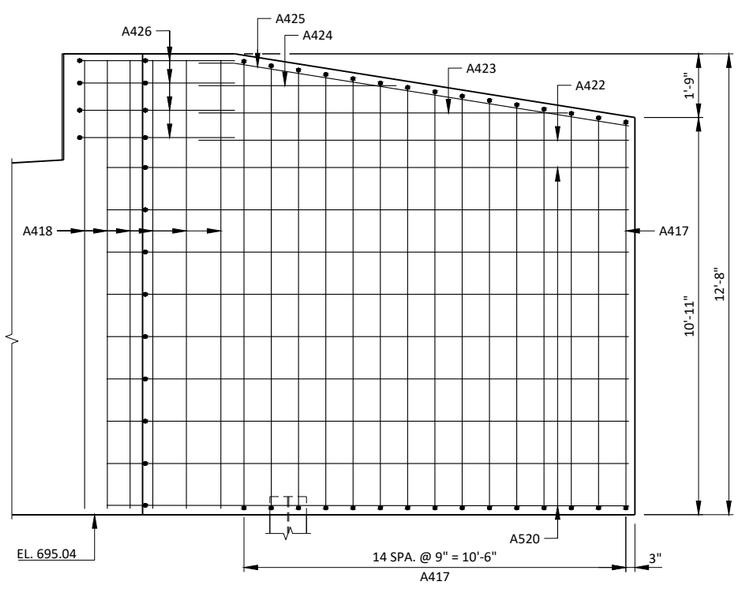

F.F. ELEVATION - WING 2

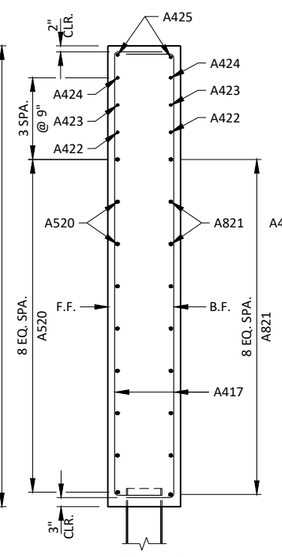

SECTION B-B

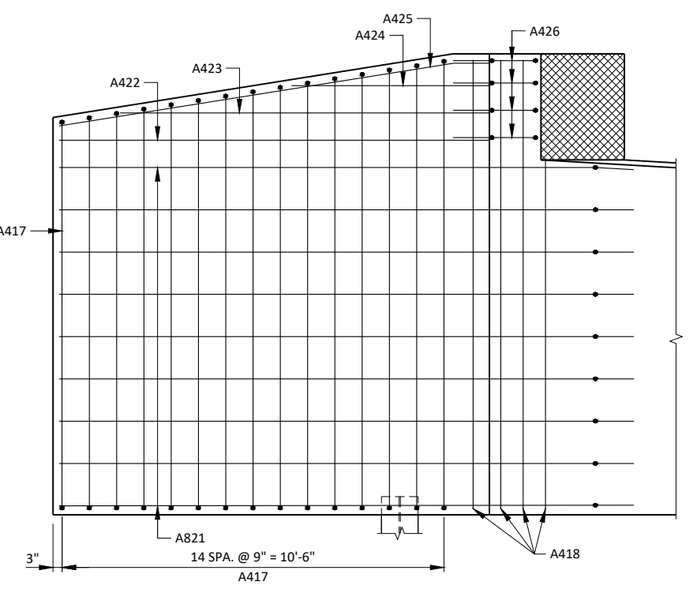

B.F. ELEVATION - WING 2

NO.	DATE	REVISION	BY

STATE OF WISCONSIN
DEPARTMENT OF TRANSPORTATION

STRUCTURE B-06-194

DRAWN BY PTB PLANS CK'D. RBH

SOUTH ABUTMENT DETAILS

SHEET 5 OF 10

50

8

8

STATE PROJECT NUMBER
7361-00-70

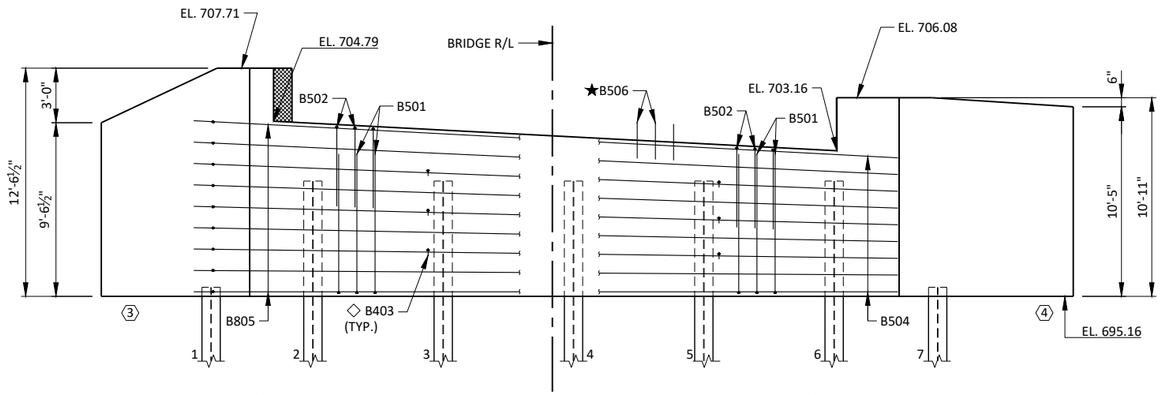

BACK FACE BAR STEEL REINF. **FRONT FACE BAR STEEL REINF.**

ELEVATION

(NORTH ABUTMENT LOOKING NORTH)

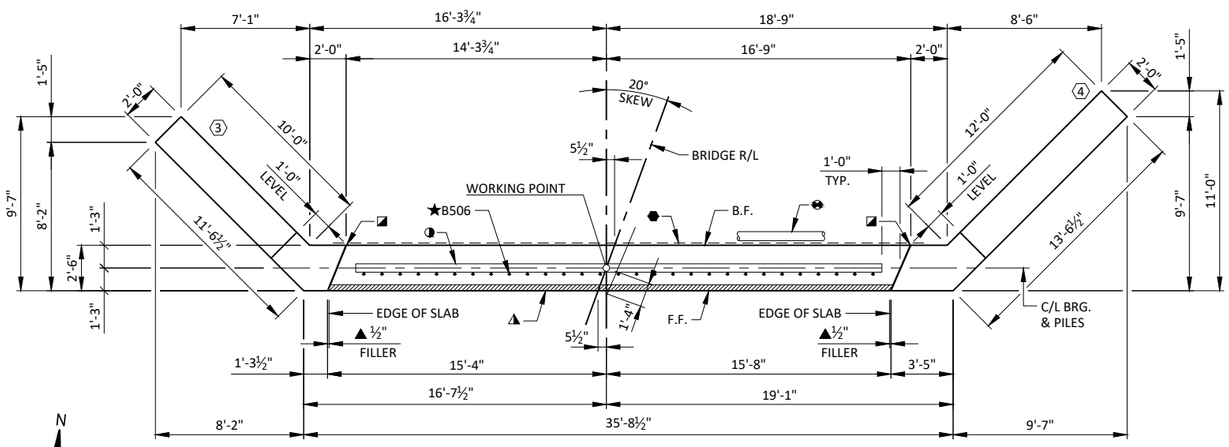

PLAN

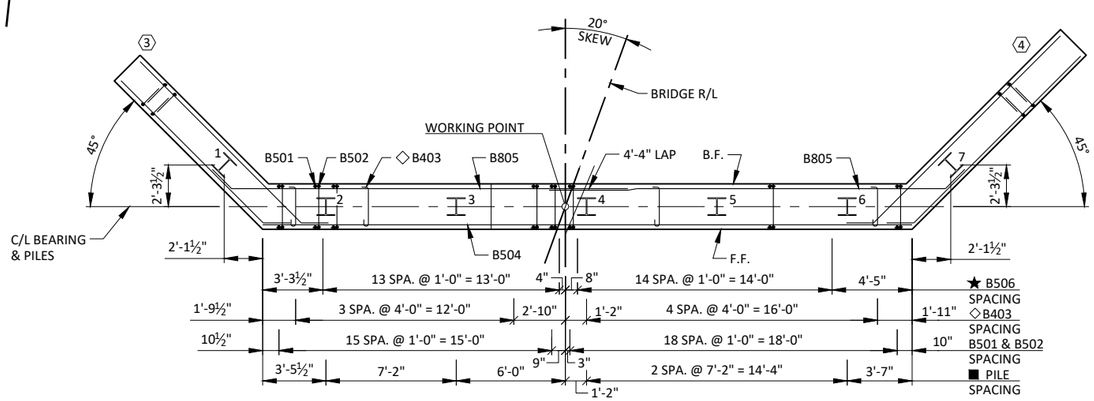

LAYOUT

NOTES

SOME BARS HAVE BEEN OMITTED FOR CLARITY. SEE SHEET 7 FOR BILL OF BARS.

SEAT ELEVATIONS SHOWN IN THE ELEVATION VIEW ARE TAKEN AT THE C/L OF BEARING NEGLECTING THE KEYED CONSTRUCTION JOINT.

DO NOT PLACE FILL HIGHER THAN 3 FEET FROM BOTTOM OF ABUTMENT UNTIL SUPERSTRUCTURE IS IN PLACE.

SPACE REINFORCEMENT TO MISS PILING

F.F. - FRONT FACE

B.F. - BACK FACE

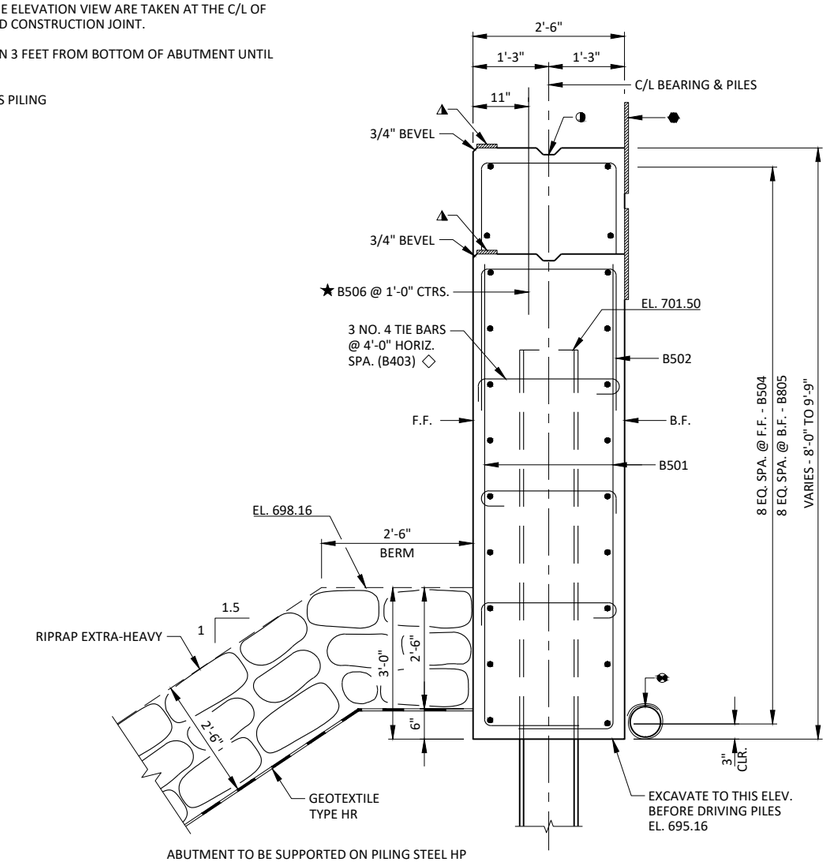

ABUTMENT TO BE SUPPORTED ON PILING STEEL HP 12-INCH X 53 LB DRIVEN TO A REQUIRED DRIVING RESISTANCE OF 170 TONS PER PILE AS DETERMINED BY THE MODIFIED GATES DYNAMIC FORMULA. ESTIMATE 80 FT. PILE LENGTHS AT THE NORTH ABUTMENT.

TYPICAL SECTION THROUGH ABUTMENT BODY

LEGEND

- ◑ KEYED CONSTRUCTION JOINT FORMED BY SURFACED & BEVELED 2x6.
- ◪ VERTICAL 18" RUBBERIZED MEMBRANE WATERPROOFING EXTEND FROM 9" BELOW BRIDGE SEAT TO 1" BELOW TOP OF WINGS.
- ⬢ 18" RUBBERIZED MEMBRANE WATERPROOFING. (HORIZONTAL)
- ▲ ½" FILLER EXTEND AS SHOWN. SEAL ALL EXPOSED HORIZ. & VERT. SURFACES OF FILLER WITH NON-STAINING GRAY, NON-BITUMINUOS JOINT SEALER. (1" DEEP & HOLD ⅛" BELOW SURFACE OF CONCRETE)
- ◭ ¾" x 4" PREFORMED FILLER, EXTEND FULL LENGTH OF ABUTMENTS BETWEEN EDGES OF SLAB.
- ★ B506 BARS MAY BE PLACED AFTER CONCRETE IS POURED BUT BEFORE IT HAS TAKEN ITS INITIAL SET. EMBED BAR 1'-0".
- ■ PILE SPACING MEASURED AT BASE OF ABUTMENT BODY.
- ⊖ PIPE UNDERDRAIN WRAPPED (6-INCH), SLOPED 0.5% MIN. TO SUITABLE DRAINAGN. ATTACH RODENT SCREEN AT ENDS OF PIPE UNDERDRAIN AS DETAILED ON SHEET 2. RODENT SCREEN TO BE INCLUDED IN THE BID ITEM "PIPE UNDERDRAIN WRAPPED 6-INCH."
- ◇ ALTERNATE THE POSITION OF THE 90° AND THE 180° BENDS AT EACH VERTICAL LAYER OF TIES.

NO.	DATE	REVISION	BY

STATE OF WISCONSIN
DEPARTMENT OF TRANSPORTATION

STRUCTURE B-06-194

DRAWN BY PTB | PLANS CK'D. RBH

NORTH ABUTMENT

SHEET 6 OF 10

STATE PROJECT NUMBER
7361-00-70

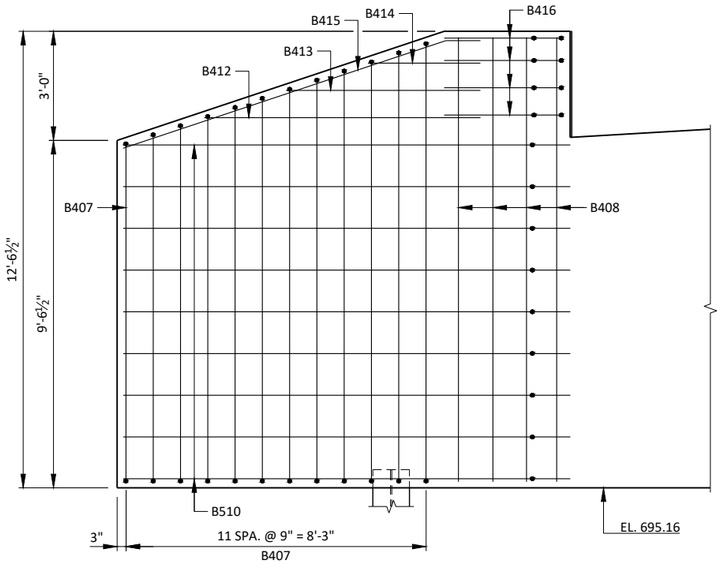

F.F. ELEVATION - WING 3

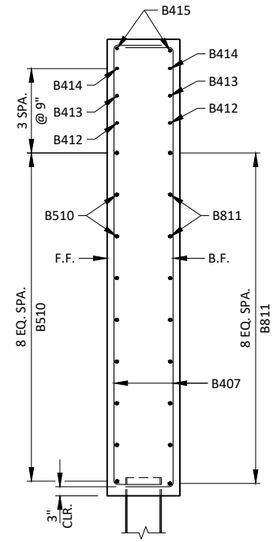

SECTION A-A

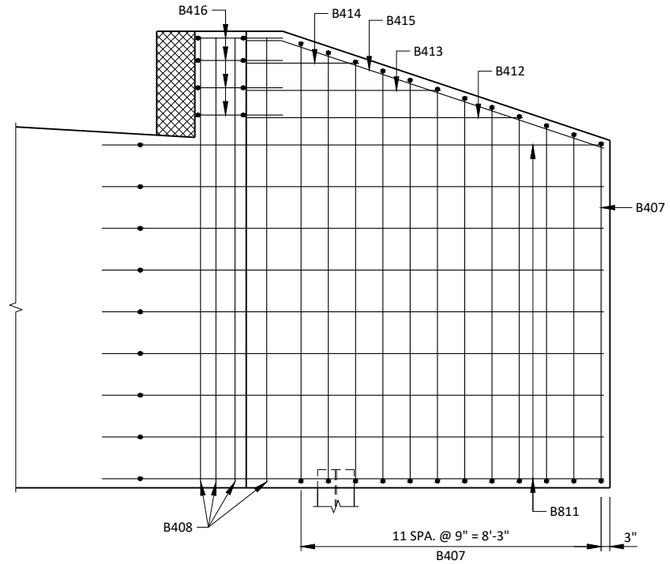

B.F. ELEVATION - WING 3

BILL OF BARS
NORTH ABUTMENT

1,810 LB (COATED)
2,560 LB (UNCOATED)

BAR MARK	NO. REQ'D.	LENGTH	BENT	COAT	BAR SERIES	LOCATION
B501	70	9-0	X			BODY - VERT. - F.F & B.F.
B502	35	10-7	X			BODY - VERT. - TOP
B403	27	2-9	X			TIE BARS
B504	9	35-7				BODY - HORIZ. - F.F.
B805	18	23-8	X			BODY - HORIZ. - B.F.
B506	29	2-0		X		BODY - VERT. - DOWELS
B407	24	13-1	X	X	✳	WING 3 - VERT. - F.F. & B.F.
B408	8	12-1		X		WING 3- VERT.
B409	1	3-3		X		WING 3 - VERT. - TOP
B510	9	12-9	X	X		WING 3 - HORIZ. - F.F.
B811	9	14-5	X	X		WING 3- HORIZ. - B.F.
B412	2	7-7		X		WING 3 - HORIZ. - F.F. & B.F. - TOP
B413	2	5-4		X		WING 3 - HORIZ. - F.F. & B.F. - TOP
B414	2	3-2		X		WING 3 - HORIZ. - F.F. & B.F. - TOP
B415	2	10-4	X	X		WING 3 - HORIZ. - F.F. & B.F. - TOP
B416	4	8-6	X	X		WING 3 - HORIZ. - TOP
B417	30	12-9	X	X	✳	WING 4 - VERT. - F.F. & B.F.
B418	10	10-6		X		WING 4- VERT.
B419	1	3-3		X		WING 4 - VERT. - TOP
B520	9	14-9	X	X		WING 4 - HORIZ. - F.F.
B821	9	16-5	X	X		WING 4 - HORIZ. - B.F.
B422	6	11-10		X		WING 4 - HORIZ. - F.F. & B.F. - TOP
B423	2	11-10		X		WING 4 - HORIZ.- F.F & B.F. - TOP
B424	4	10-7	X	X		WING 4 - HORIZ. F.F. & B.F.- TOP

NOTES: THE FIRST DIGIT OF A BAR MARK SIGNIFIES THE BAR SIZE.

DIMENSIONS IN BENDING DETAILS ARE OUT TO OUT OF BAR.

✳ LENGTH SHOWN IS AN AVERAGE LENGTH ONLY. SEE BAR SERIES TABLE FOR ACTUAL LENGTHS.

BAR SERIES TABLE

BAR MARK	NO. REQ'D.	LENGTH
B407	2 SERIES OF 12	14-6 TO 11-8
B417	2 SERIES OF 15	13-0 TO 12-6

BUNDLE AND TAG EACH SERIES SEPARATELY.

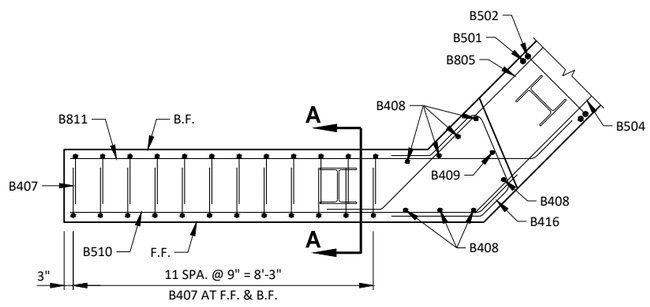

PLAN VIEW - WING 3

NOTES

SOME BARS HAVE BEEN OMITTED FOR CLARITY. SEE THIS SHEET FOR BILL OF BARS.

SPACE REINFORCEMENT TO MISS PILING

F.F. - FRONT FACE

B.F. - BACK FACE

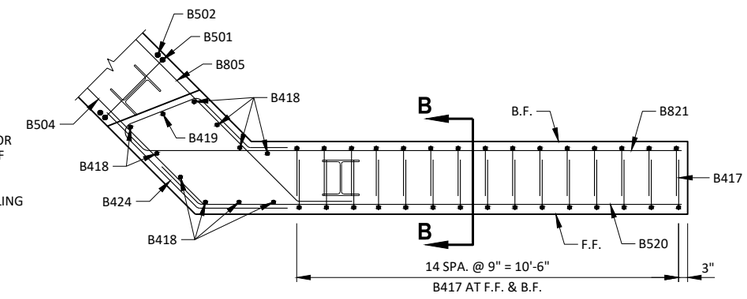

PLAN VIEW - WING 4

B805, B510, B811, B520 & B821

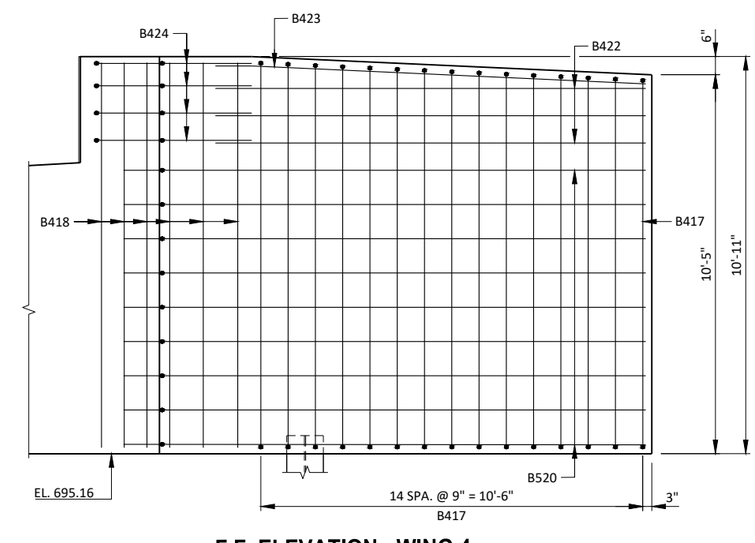

F.F. ELEVATION - WING 4

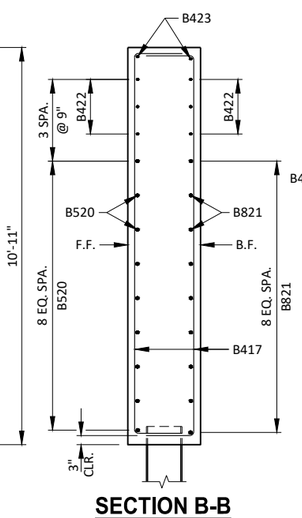

SECTION B-B

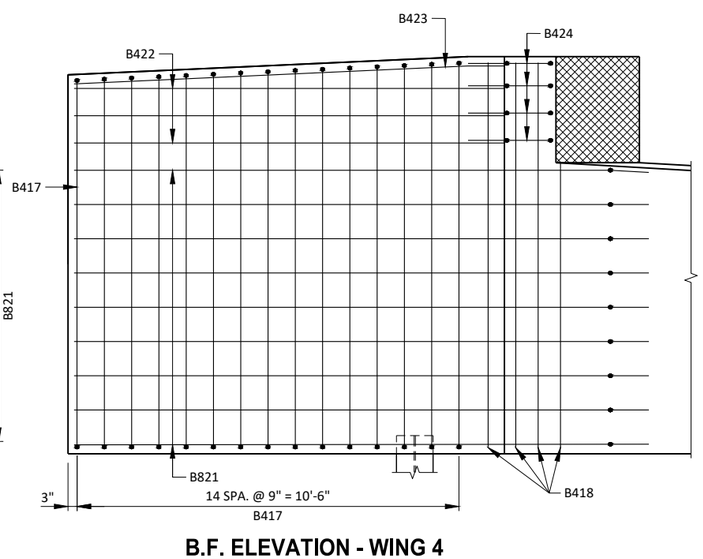

B.F. ELEVATION - WING 4

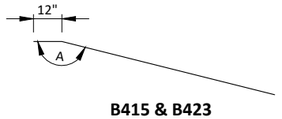

B415 & B423

MARK	'A'
B415	161°34'
B423	177°24'

NO.	DATE	REVISION	BY

STATE OF WISCONSIN
DEPARTMENT OF TRANSPORTATION

STRUCTURE B-06-194

DRAWN BY PTB PLANS CK'D. RBH

NORTH ABUTMENT DETAILS

SHEET 7 OF 10

52

8

8

STATE PROJECT NUMBER
7361-00-70

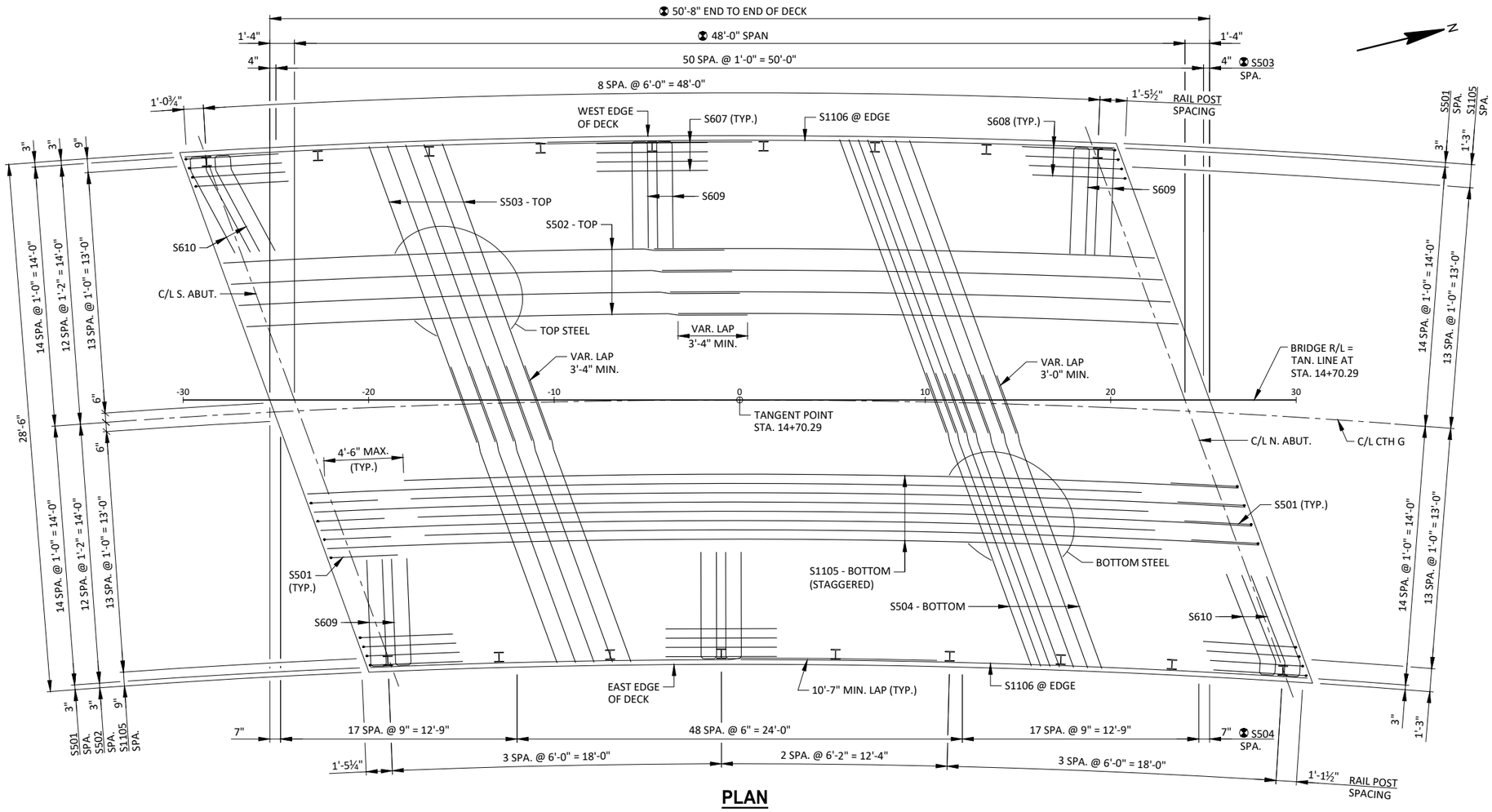

PLAN

NOTES

SUPPORT ALTERNATE TOP TRANSVERSE BARS IN SLAB BY INDIVIDUAL BAR CHAIRS AT APPROX. 3'-0" CENTERS. SUPPORT BOTTOM LONGITUDINAL BARS BY CONTINUOUS BAR CHAIRS AT APPROX. 4'-0" CENTERS.

PLACE TRANSVERSE BARS PARALLEL TO THE CENTERLINE OF SUBSTRUCTURE UNITS.

THE SLAB THICKNESS DIMENSION IS MINIMUM. ANY TOLERANCES NECESSARY TO CORRECT CONSTRUCTION DISCREPANCIES ARE TO BE PLUS (+).

RAIL POST SPACING IS MEASURED AT THE FRONT FACE OF BASE PLATES.

SEE SHEET 1 FOR HORIZONTAL CURVE DATA.

MEASURED ALONG BRIDGE REFERENCE LINE.

TANGENT LINE OFFSETS AT EDGE OF DECK

TANGENT OFFSET LOCATION	WEST EDGE OF DECK TAN. OFFSET	EAST EDGE OF DECK TAN. OFFSET
-30	13'-4⅛"	--
-20	13'-10¼"	14'-8⅛"
-10	14'-1¾"	14'-4¼"
0	14'-3"	14'-3"
+10	14'-1¾"	14'-4¼"
+20	13'-10¼"	14'-8⅛"
+30	---	15'-2½"

SURVEY TOP OF DECK ELEVATIONS

	S. ABUT.	0.50 PT.	N. ABUT.
WEST EDGE OF DECK			
CENTER LINE			
EAST EDGE OF DECK			

PRIOR TO RELEASING SLAB FASLEWORK, TAKE TOP OF DECK ELEVATIONS AT THE C/L OF THE ABUTMENTS AND AT 0.50 PTS. TO VERIFY CAMBER. TAKE ELEVATIONS ALONG THE EDGE OF DECK AND CENTER LINE. RECORD THE ELEVATIONS IN THE ABOVE TABLE FOR THE "AS BUILT" PLANS.

TOP OF DECK ELEVATIONS

	C/L S. ABUT.	0.10 PNT.	0.20 PNT.	0.30 PNT.	0.40 PNT.	0.50 PNT.	0.60 PNT.	0.70 PNT.	0.80 PNT.	0.90 PNT.	C/L N. ABUT.
W. EDGE	707.71	707.69	707.67	707.65	707.64	707.64	707.64	707.65	707.66	707.68	707.71
C/L	706.83	706.81	706.80	706.79	706.79	706.79	706.80	706.81	706.83	706.86	706.89
E. EDGE	705.96	705.94	705.93	705.93	705.93	705.94	705.96	705.98	706.01	706.04	706.08

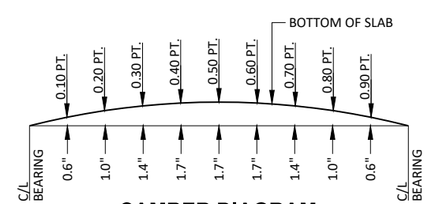

CAMBER DIAGRAM

CAMBER SHOWN IS BASED ON 3 TIMES DEAD LOAD DEFLECTIONS. CAMBER SPAN AS SHOWN TO PROVIDE FOR THEORETICAL DEADLOAD DEFLECTION AND FUTURE PLASTIC FLOW. CAMBER DOES NOT INCLUDE ALLOWANCE FOR FORM SETTLEMENT.

TO DETERMINE FALSEWORK ELEVATION AT EDGE OF SLAB OR CENTER LINE FOLLOW THIS PROCEDURE:

TOP OF SLAB ELEVATION AT FINAL GRADE
-SLAB THICKNESS
+CAMBER
+FORM SETTLEMENT/DEFLECTION DUE TO PLACEMENT OF SLAB CONCRETE (COMPUTED BY CONTRACTOR)
=TOP OF SLAB FALSEWORK ELEVATION.

8

8

NO.	DATE	REVISION	BY

STATE OF WISCONSIN
DEPARTMENT OF TRANSPORTATION

STRUCTURE B-06-194

DRAWN BY PTB | PLANS CK'D. RBH

SUPERSTRUCTURE

SHEET 8 OF 10

STATE PROJECT NUMBER
7361-00-70

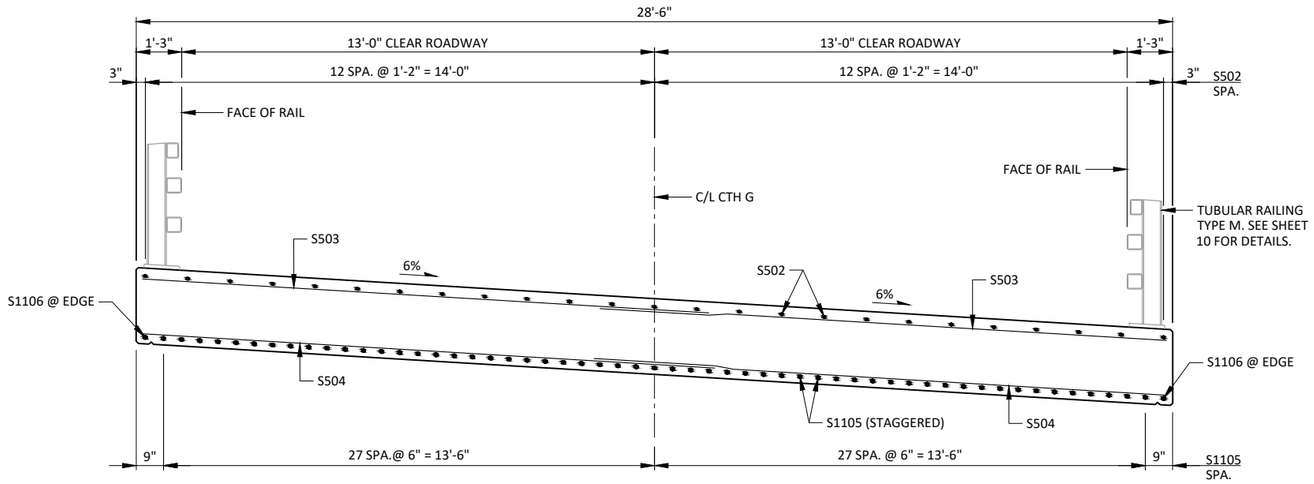

CROSS SECTION THROUGH ROADWAY

LOOKING NORTH

BILL OF BARS SUPERSTRUCTURE — 21,940 LB (COATED)

BAR MARK	NO. REQ'D.	LENGTH	BENT	COAT	LOCATION
S501	58	8-2	X	X	ENDS OF DECK
S502	50	27-0		X	SLAB - TOP - LONGIT.
S503	114	17-0		X	SLAB - TOP - TRANS. & AT ABUT.
S504	166	16-10		X	SLAB - BOTTOM - TRANS.
S1105	55	45-0		X	SLAB - BOTTOM - LONGIT.
S1106	4	30-7		X	SLAB - BOTTOM - LONGIT. - EDGES
S607	56	6-0		X	RAIL POSTS - INTERIOR
S608	16	6-0	X	X	RAIL POSTS - CORNERS
S609	32	12-0	X	X	RAIL POSTS
S610	4	12-0	X	X	RAIL POSTS - CORNERS 2 & 4

NOTES: THE FIRST DIGIT OF A THREE DIGIT BAR MARK OR THE FIRST TWO DIGITS OF A FOUR DIGIT BAR MARK SIGNIFIES THE BAR SIZE.

DIMENSIONS IN BENDING DETAILS ARE OUT TO OUT OF BAR.

SOME BARS HAVE BEEN OMITTED FOR CLARITY.

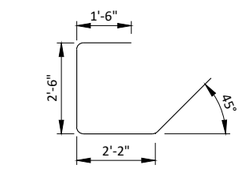

S501

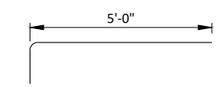

S608

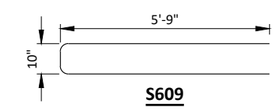

S609

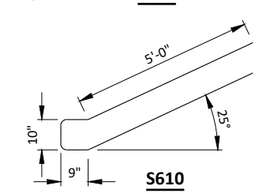

S610

LEGEND

- ⬢ 18" RUBBERIZED MEMBRANE WATERPROOFING. (HORIZONTAL)
- ▲ ¾" x 4" PREFORMED FILLER, EXTEND FULL LENGTH OF ABUTMENTS BETWEEN EDGES OF SLAB.
- ✳ DIMENSION IS NORMAL TO THE C/L OF SUBSTRUCTURE UNITS.
- ✳✳ SEE SHEET 4 FOR PLACEMENT OF A506 BARS AND SHEET 6 FOR PLACEMENT OF B506 BARS.
- ⊗ MEASURED ALONG BRIDGE REFERENCE LINE.

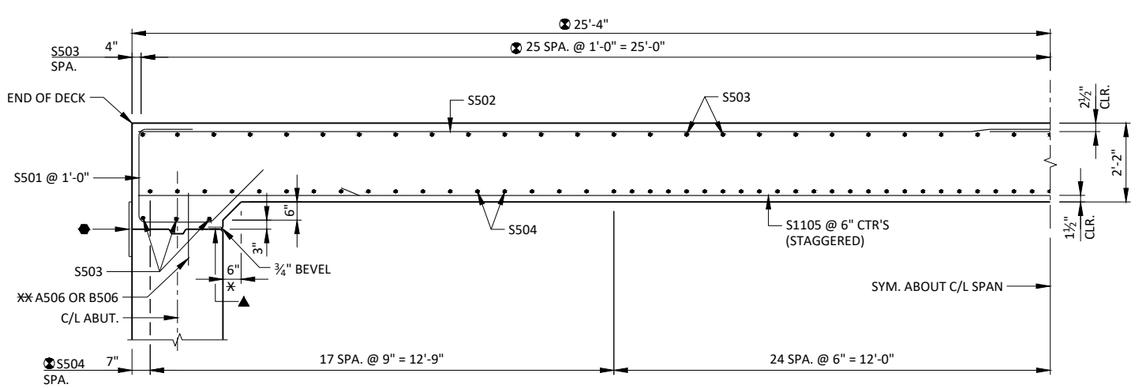

PARTIAL LONGITUDINAL SECTION THROUGH ROADWAY

8

8

NO.	DATE	REVISION	BY

STATE OF WISCONSIN
DEPARTMENT OF TRANSPORTATION

STRUCTURE B-06-194

DRAWN BY PTB PLANS CK'D. RBH

SUPERSTRUCTURE DETAILS

SHEET 9 OF 10

54

STATE PROJECT NUMBER
7361-00-70

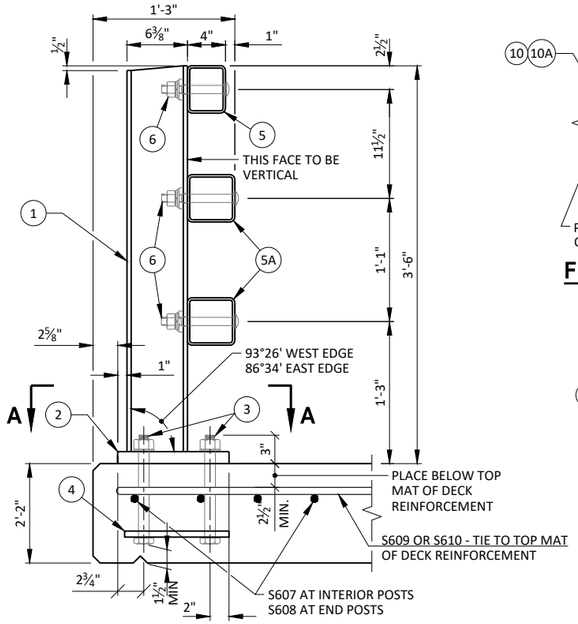

SECTION THROUGH RAILING ON DECK

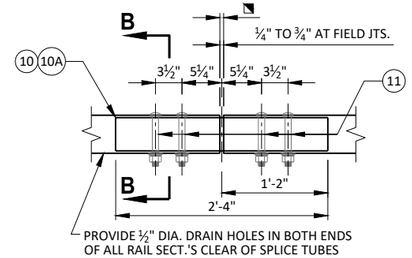

FIELD ERECTION JOINT DETAIL

RDWY. OPENING OR 2½" MIN. FOR STRIP SEAL EXP. JOINT & (¼" TO ¾") OPENING FOR A1 ABUTMENT.

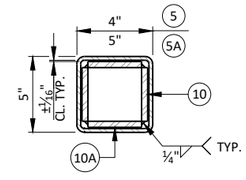

SECTION B-B

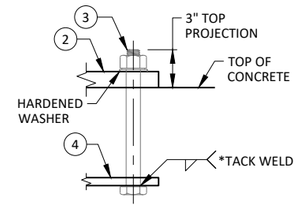

ANCHOR BOLTS

* ANCHOR BOLT ASSEMBLY MAY BE TACK WELDED, EITHER IN THE SHOP, OR IN THE FIELD AFTER THE ANCHOR PLATE IS PLACED.

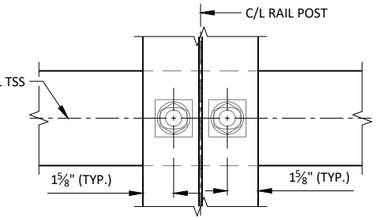

SECTION THROUGH POST WEB

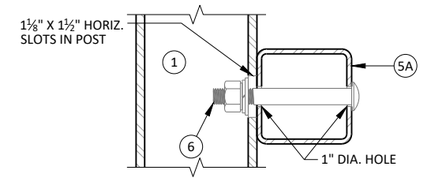

SECTION THROUGH RAIL

NOTE: CONNECTIONS AT LOWER RAILS SHOWN. CONNECTIONS AT TOP RAIL SIMILAR.

TYPICAL RAIL TO POST CONNECTIONS

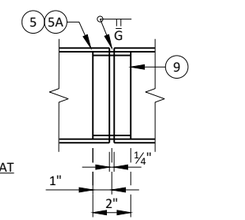

SHOP RAIL SPLICE DETAIL

(LOCATION MUST BE SHOWN ON SHOP DRAWINGS)

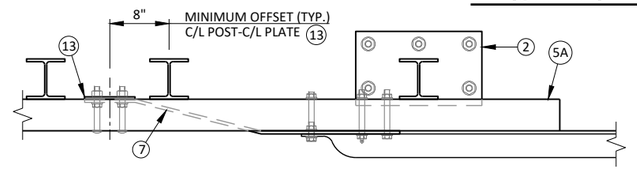

TOP VIEW AT END POST

(THRIE BEAM RAIL ATTACHMENT)

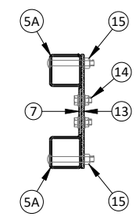

SECTION C-C

SECTION A-A

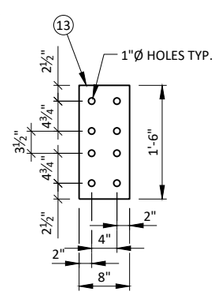

ANCHOR PLATE

AT BEAM GUARD ATTACHMENT

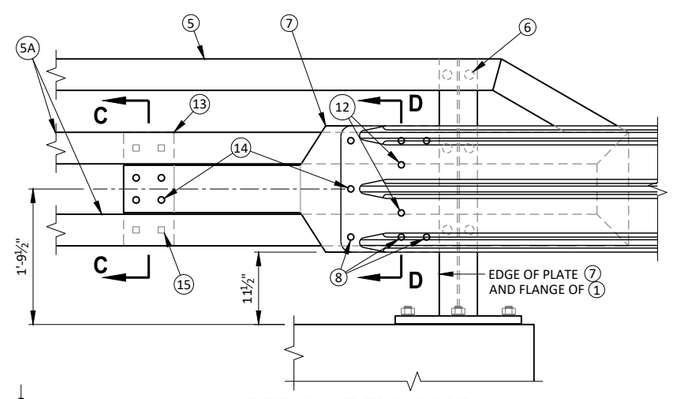

DETAIL AT END POST

(THRIE BEAM RAIL ATTACHMENT)

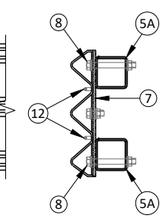

SECTION D-D

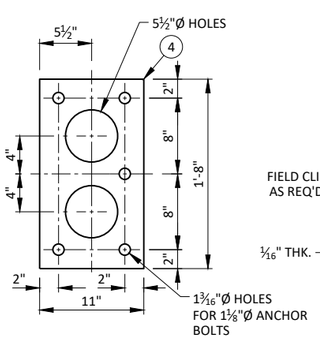

ANCHOR PLATE

AT RAIL TO DECK CONNECTION

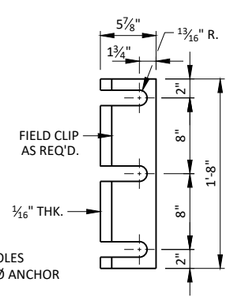

POST SHIM DETAIL

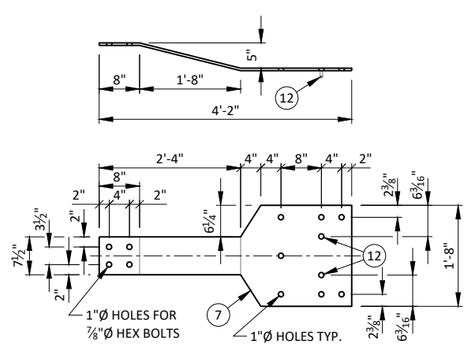

BACK-UP PLATE DETAIL

AT BEAM GUARD ATTACHMENT

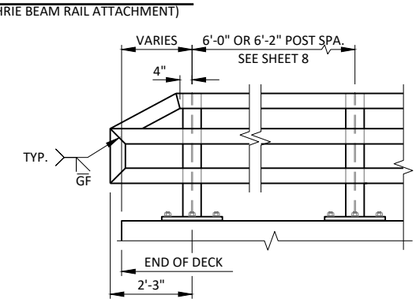

PART ELEVATION OF RAILING

LEGEND

1. W6x25 WITH 1⅛" x 1½" HORIZONTAL SLOTS ON EACH SIDE OF POST FOR BOLT NO. 6. CUT BOTTOM OF POST TO MATCH CROSS SLOPE OF ROADWAY. PLACE POST VERTICAL. PLACE POSTS NORMAL TO GRADE LINE.
2. PLATE 1¼"x11¾"x1'-8" WITH 1 7/16" DIA. OVERSIZED HOLES FOR ANCHOR BOLTS NO. 3. WELD TO NO. 1 AS SHOWN.
3. ASTM A449 - 1⅛" DIA. ANCHOR BOLTS WITH NUT AND HARDENED WASHER (ALL GALVANIZED). 5 REQ'D. PER POST. THREAD 3" AND PLACE NORMAL TO PLATE NO. 2. CHAMFER TOP OF BOLTS BEFORE THREADING. AT POSTS ON CONCRETE SLAB SUPERSTRUCTURES WHERE THE SLAB THICKNESS IS > 16" USE 1'-3" LONG. USE 10¾" LONG AT ALL OTHER LOCATIONS.
4. ⅝"x11"x1'-8" ANCHOR PLATE (GALVANIZED) WITH 1 3/16" DIA. HOLES FOR ANCHOR BOLTS NO. 3.
5. TSS 5x4x0.25 STRUCTURAL TUBING. ATTACH TO NO. 1 WITH NO. 6.

5A. TSS 5x5x0.25 STRUCTURAL TUBING. ATTACH TO NO. 1 WITH NO. 6.

6. ⅞" DIA. A325 SLOTTED ROUND HEAD BOLT WITH NUT, 3/16"x1⅞"x1⅞" WASHER, AND LOCK WASHER (2 REQ'D. AT EACH RAIL TO POST LOCATION).
7. ½" THK. BACK-UP PLATE WITH 2 - ⅞"x1½" THREADED SHOP WELDED STUDS (NO. 12). BOLT TO RAIL AS SHOWN IN DETAIL. REQUIRED AT THRIE BEAM GUARD RAIL ATTACHMENTS ONLY. PLACE SYMMETRICALLY ABOUT TUBES NO. 5A.
8. 1" DIA. HOLES IN PLATE NO. 7 & TUBES NO. 5A FOR ⅞" DIA. A325 BOLTS WITH HEX NUTS AND WASHERS. 6 HOLES IN TUBES AND PLATE NO. 7.
9. SPLICE SLEEVE FABRICATED FROM ¼" PLATE. PROVIDE "SLIDING FIT".
10. ⅜"x3⅜"x2'-4" PLATE. 2 PER RAIL. USED IN NO. 5 & 5A.

10A. ⅜"x2⅝"x2'-4" PLATE USED IN NO. 5, ⅜"x3⅜"x2'-4" PLATE USED IN NO. 5A. 2 PER RAIL.

11. ⅞" DIA. A325 ROUND HEAD BOLT WITH NUT, WASHER, AND LOCK WASHER. USE 15/16"x1¼" LONGIT. SLOTTED HOLES IN PLATE NO. 10A. AT FIELD JOINTS AND 15/16"x2¼" MIN. LONGIT. SLOTTED HOLES AT EXP. JOINTS IN PLATE NO. 10A. PROVIDE 15/16" DIA. ROUND HOLES IN TUBES NO. 5 AND NO. 5A.
12. ⅞" DIA. BY 1½" LONG THREADED SHOP WELDED STUDS (2 REQ'D).
13. ⅜"x8"x1'-6" PLATE. BOLT TO RAIL AS SHOWN IN DETAIL. REQ'D. AT THRIE BEAM GUARD RAIL ATTACHMENTS ONLY. PLACE SYM. ABOUT TUBES NO. 5A.
14. ⅞" DIA. x 2" LONG A325 HEX BOLT WITH NUT AND WASHER (5 REQ'D.).
15. 1" DIA. HOLES IN TUBES NO. 5A FOR ⅞" A325 ROUND HEAD BOLT WITH NUT, WASHER AND LOCK WASHER (4 REQ'D.). 4 HOLES IN TUBES.

GENERAL NOTES

1. BID ITEM SHALL BE "RAILING TUBULAR TYPE M" WHICH INCLUDES ALL ITEMS SHOWN.
2. RAIL POST AND BASE PLATES SHALL CONFORM TO THE REQUIREMENTS OF ASTM A709 GRADE 50. HOLLOW RAILING STRUCTURAL TUBING SHALL CONFORM TO THE REQUIREMENTS OF ASTM A500 GRADE B OR C WITH A CERTIFIED FY=50 KSI. ANCHOR PLATES AND SPLICE TUBE PLATES SHALL CONFORM TO THE REQUIREMENTS OF ASTM A709 GRADE 36.
3. THE NUT SECURING THE POST BASE PLATE TO THE CONCRETE SHALL BE TIGHTENED TO A SNUG FIT AND GIVEN AN ADDITIONAL ⅓ TURN.
4. RAILS SHALL BE CONTINUOUS OVER A MINIMUM OF THREE (3) POSTS WITHOUT SPLICES WHERE POSSIBLE.
5. ENDS OF TUBE SECTIONS SHALL BE SAWED. GRIND SMOOTH EXPOSED EDGES. ALL CUT ENDS SHALL BE TRUE AND SMOOTH.
6. WELD IS THE SAME ON BOTH FLANGES. FLANGE WELD DOES NOT REQUIRE MAGNETIC PARTICLE TESTING.
7. FILL BOLT SLOT OPENINGS IN POST SHIMS AND PLATE NO. 2 AND CAULK AROUND PERIMETER OF PLATE NO. 2 WITH NON-STAINING GRAY NON-BITUMINOUS JOINT SEALER. STEEL POST SHIMS MAY BE USED UNDER POSTS WHERE REQ'D. FOR ALIGNMENT.
8. POST BASE PLATES SHALL BE FLAT WITH ALL SURFACES SMOOTH AND FREE FROM WARP AND ALL EDGES SMOOTH, STRAIGHT AND VERTICAL. ALL PLATE CUTS SHALL BE MACHINE OR MACHINE FLAME CUT.
9. ALL MATERIAL SHALL BE GALVANIZED AFTER FABRICATION. PRIOR TO GALVANIZING, ALL STEEL RAILING POSTS & STEEL TUBING SHALL BE GIVEN A NO. 6 BLAST CLEANING BY S.S.P.C. SPECIFICATIONS.
10. THIS RAILING MEETS NCHRP REPORT 350 EVALUATION CRITERIA FOR TEST LEVEL 4 (TL-4).

8

8

NO.	DATE	REVISION	BY

STATE OF WISCONSIN
DEPARTMENT OF TRANSPORTATION

STRUCTURE B-06-194

DRAWN BY PTB PLANS CK'D. RBH

TUBULAR STEEL RAILING TYPE M

SHEET 10 OF 10

EARTHWORK-CTH G

	AREA (SF)			INCREMENTAL VOL (CY)					CUMMULATIVE VOLUME (CY)				
STATION	CUT	MARSH	FILL	CUT NOTE 1	MARSH CUT NOTE 2	FILL NOTE 3	REDUCED MARSH (60%) NOTE 4	FILL (25%) NOTE 5	CUT 1.00 NOTE 1	FILL	REDUCED MARSH (60%) NOTE 4	FILL (25%) NOTE 5	MASS ORDINATE NOTE 6
12+00	0	0	0	0	0	0	0	0	0	0	0	0	0
12+50	25	7	109	23	7	101	4	126	23	101	4	126	-99
13+00	3	26	201	26	31	287	18	359	50	388	22	485	-413
13+50	0	47	287	3	67	451	40	564	52	839	63	1049	-934
14+00	0	43	259	0	83	505	50	632	52	1345	113	1681	-1516
14+45	8	34	176	6	64	363	39	454	59	1707	151	2134	-1925
14+96	0	7	116	7	39	276	23	345	66	1983	174	2479	-2239
15+00	0	4	158	0	1	20	0	25	66	2004	175	2504	-2264
15+50	0	49	297	0	49	421	29	526	66	2424	204	3030	-2761
16+0	0	56	353	0	97	602	57	753	66	3027	261	3783	-3457
16+50	18	50	293	17	102	598	60	747	82	3624	321	4531	-4127
17+00	44	19	119	58	64	381	38	477	140	4006	359	5007	-4507
17+50	56	0	3	94	17	113	10	141	234	4119	370	5148	-4544
17+75	0	0	0	26	0	1	0	2	260	4120	370	5150	-4520
			COLUMN TOTALS =	260	620	4120	370	5150					-4520

NOTES:	
1 - CUT	CUT INCLUDES SALVAGED/UNUSABLE PAVEMENT MATERIAL
2 - MARSH CUT	MARSH EXCAVATION
3 - FILL	DOES NOT INCLUDE UNUSABLE PAVEMENT EXC VOLUME
4 - REDUCED MARSH (60%)	(MARSH CUT)*0.6
5 - FILL 25%	(UNEXPANDED FILL)*1.25
6 - MASS ORDINATE	CUT + ROCK (10%) + REDUCED MARSH (60%) - FILL (25%)

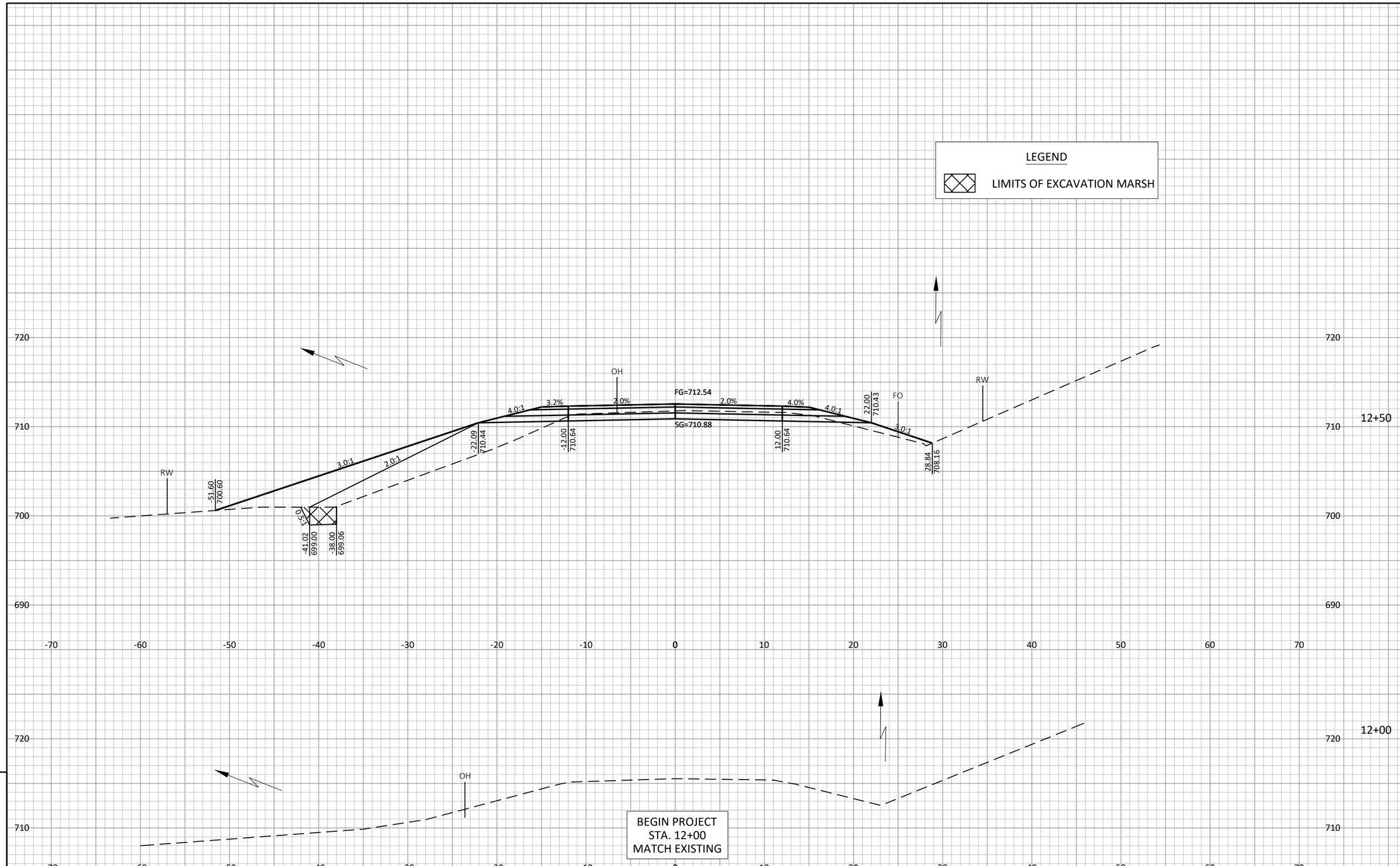

9

9

PROJECT NO: 7361-00-70	HWY: CTH G	COUNTY: BUFFALO	CROSS SECTIONS: MAINLINE	SHEET 57	E

FILE NAME : S:\PROJECTS\W11602 WISDOT - CTH G BRIDGE, BUFFALO CO\DESIGN\CORRIDORS\73610000_CORRIDOR 30MPH VERT.DWG PLOT DATE : 7/29/2021 3:58:32 PM PLOT BY : HANOLD, ROBERT PLOT SCALE : 1" = 1' LAYOUT : 1

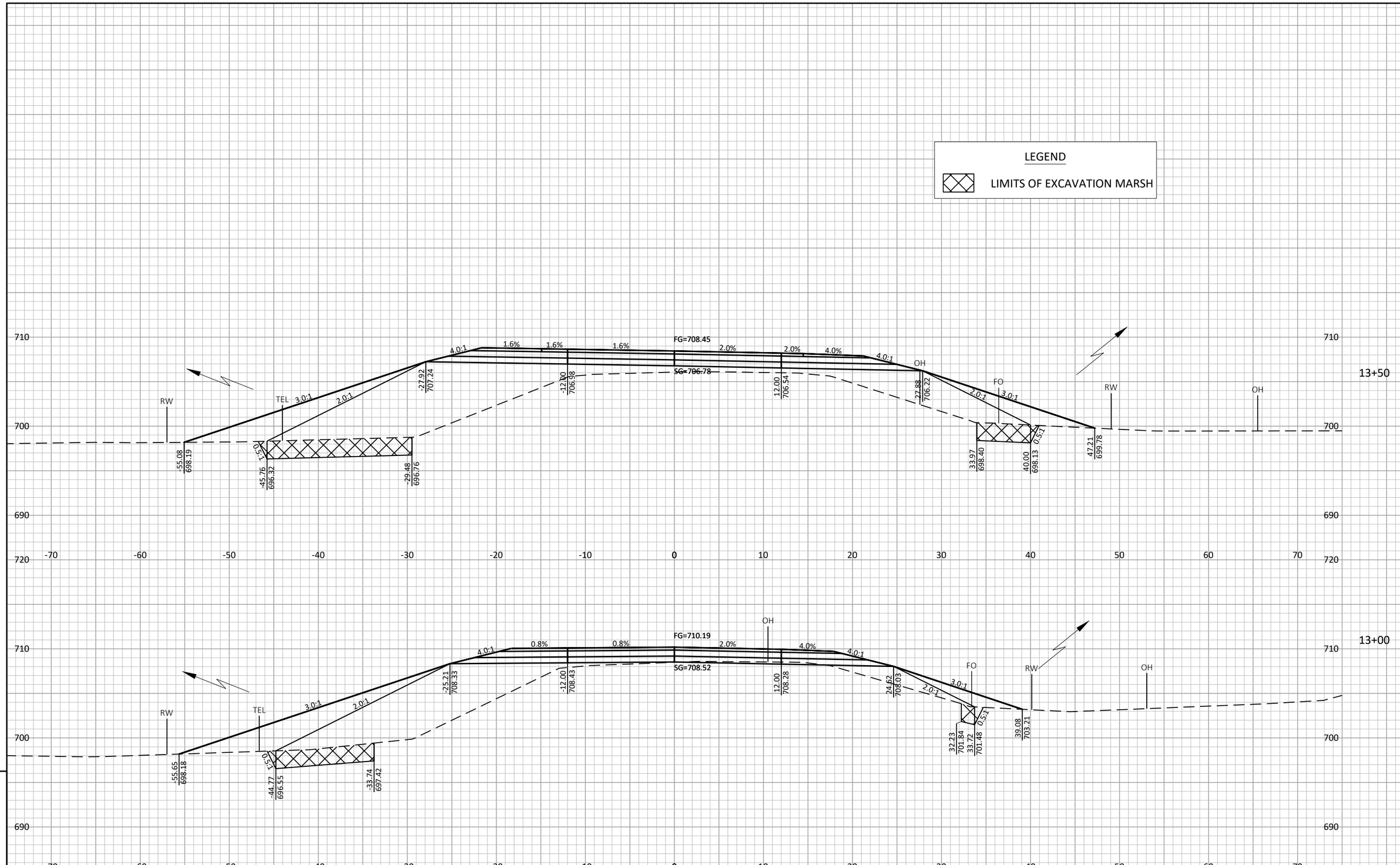

PROJECT NO: 7361-00-70	HWY: CTH G	COUNTY: BUFFALO	CROSS SECTIONS: MAINLINE	SHEET 58	E

FILE NAME : S:\PROJECTS\W11602 WISDOT - CTH G BRIDGE, BUFFALO CO\DESIGN\CORRIDORS\73610000_CORRIDOR 30MPH VERT.DWG PLOT DATE : 7/29/2021 3:58:33 PM PLOT BY : HANOLD, ROBERT PLOT SCALE : 1" = 1' LAYOUT : 2

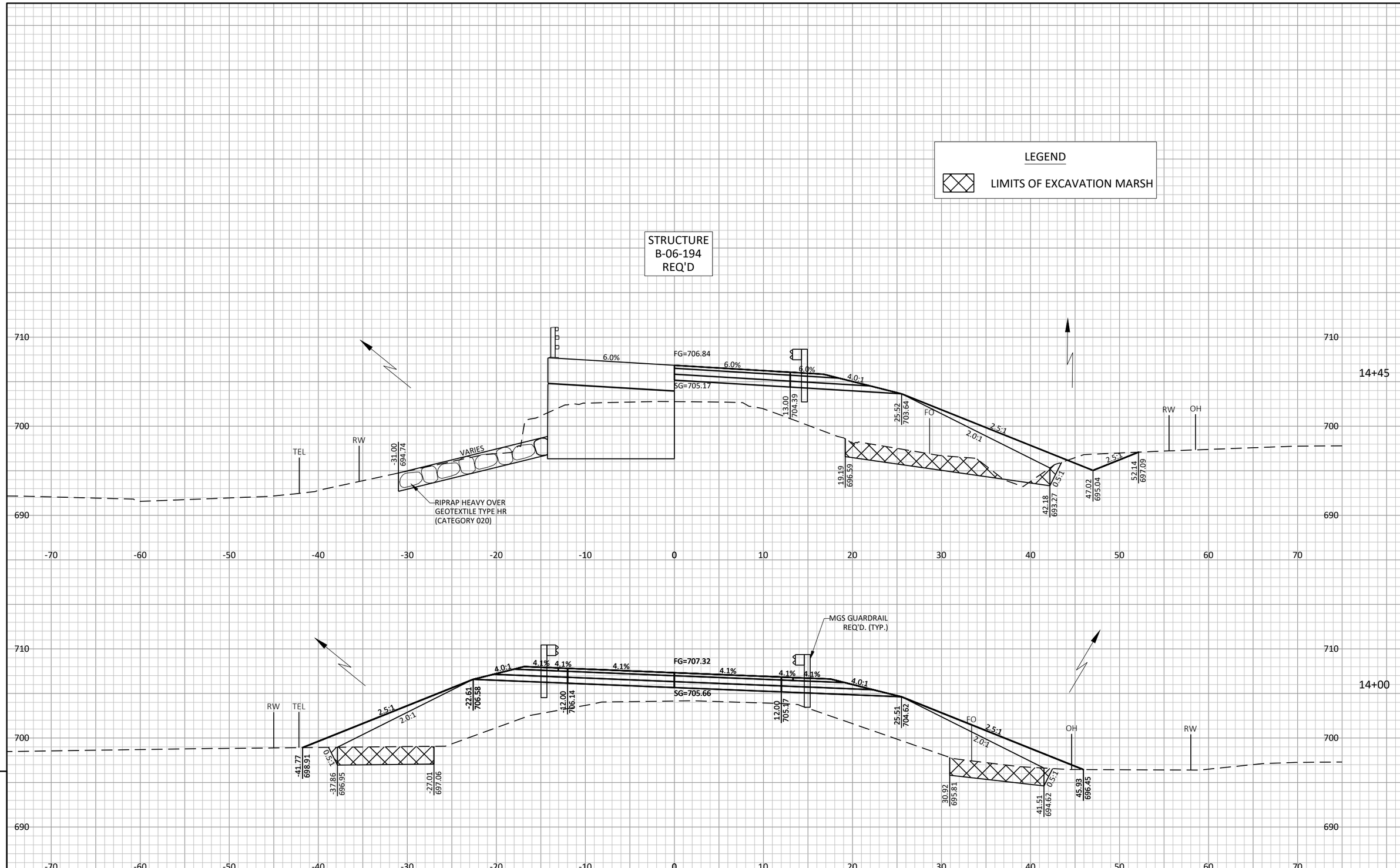

PROJECT NO: 7361-00-70	HWY: CTH G	COUNTY: BUFFALO	CROSS SECTIONS: MAINLINE	SHEET 59	E

FILE NAME : S:\PROJECTS\W11602 WISDOT - CTH G BRIDGE, BUFFALO CO\DESIGN\CORRIDORS\73610000_CORRIDOR 30MPH VERT.DWG PLOT DATE : 7/29/2021 3:58:35 PM PLOT BY : HANOLD, ROBERT PLOT SCALE : 1" = 1' LAYOUT : 3

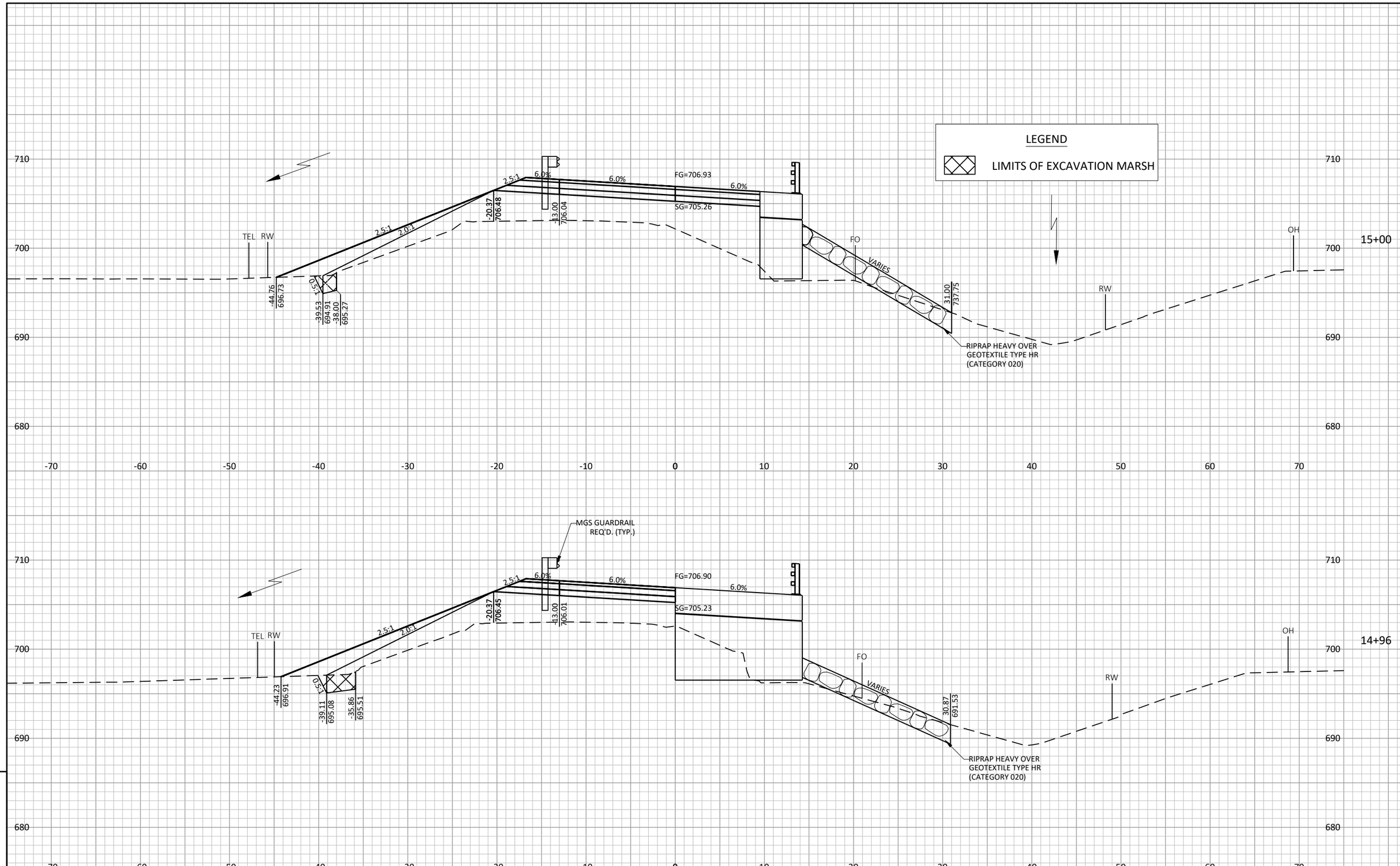

9

9

PROJECT NO: 7361-00-70	HWY: CTH G	COUNTY: BUFFALO	CROSS SECTIONS: MAINLINE	SHEET 60	E

FILE NAME : S:\PROJECTS\W11602 WISDOT - CTH G BRIDGE, BUFFALO CO\DESIGN\CORRIDORS\73610000_CORRIDOR 30MPH VERT.DWG PLOT DATE : 7/29/2021 3:58:37 PM PLOT BY : HANOLD, ROBERT PLOT SCALE : 1" = 1' LAYOUT : 4

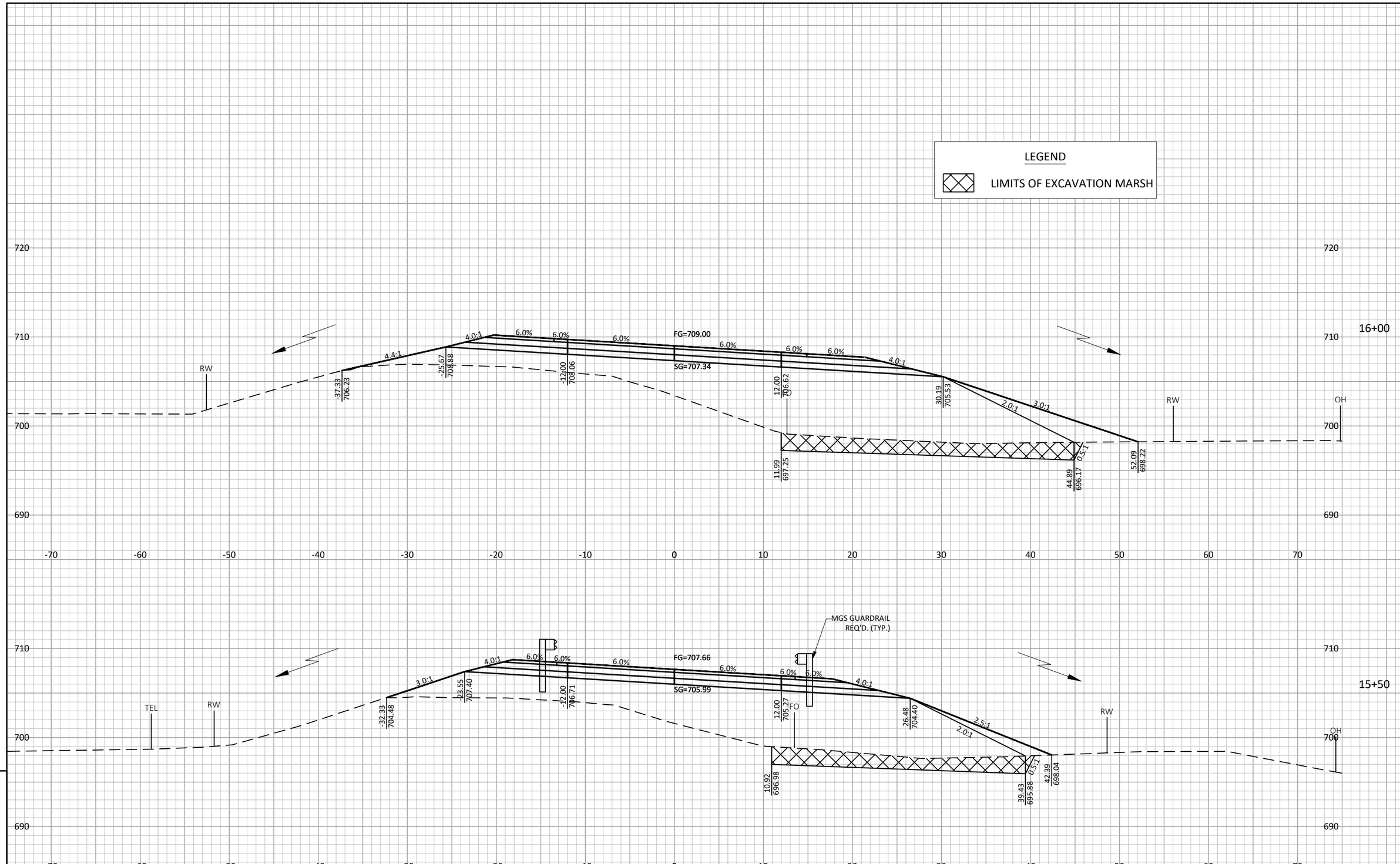

PROJECT NO: 7361-00-70	HWY: CTH G	COUNTY: BUFFALO	CROSS SECTIONS: MAINLINE	SHEET 61	E

FILE NAME : S:\PROJECTS\W11602 WISDOT - CTH G BRIDGE, BUFFALO CO\DESIGN\CORRIDORS\73610000_CORRIDOR 30MPH VERT.DWG PLOT DATE : 7/29/2021 3:58:38 PM PLOT BY : HANOLD, ROBERT PLOT SCALE : 1" = 1' LAYOUT : 5

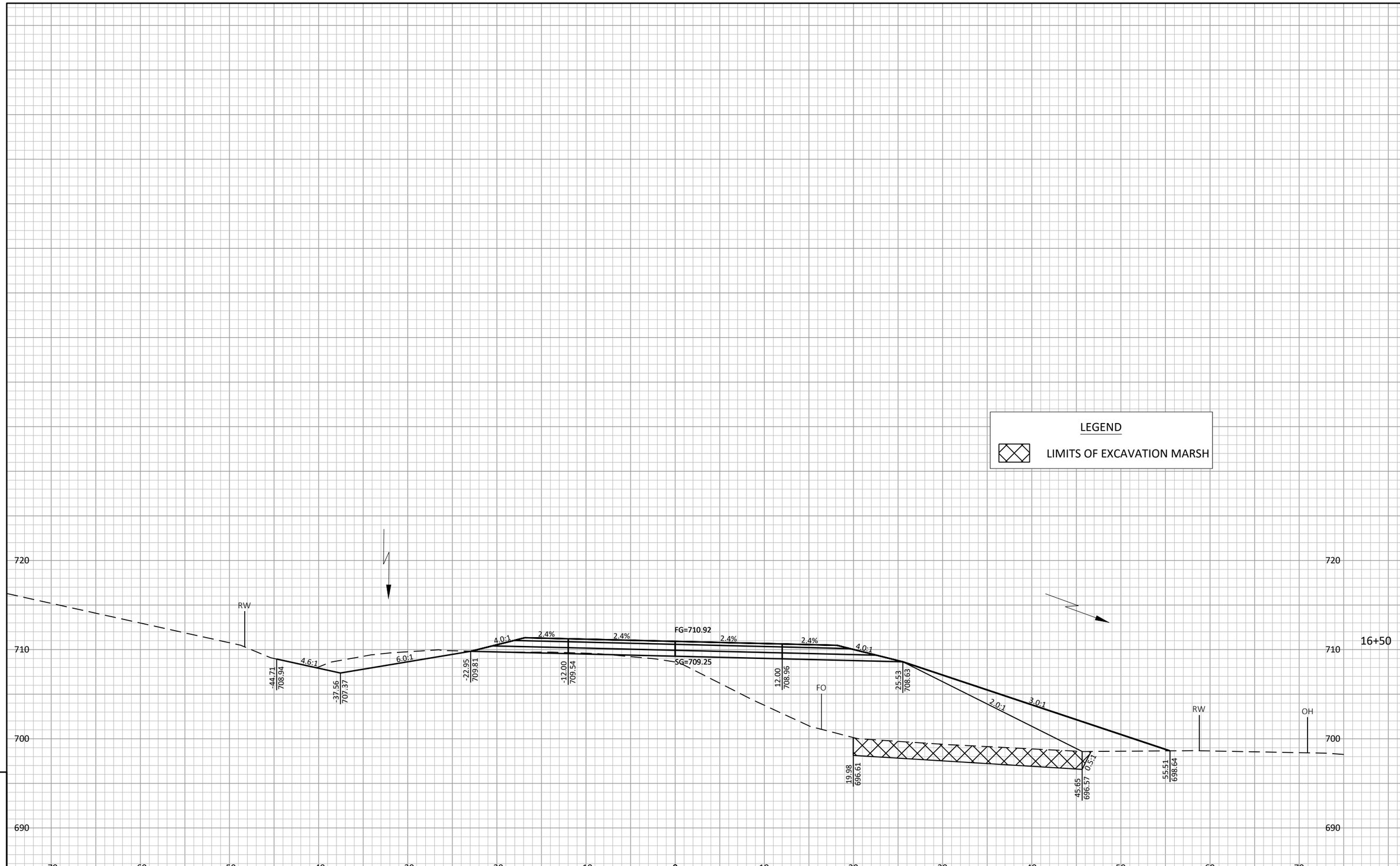

9

9

PROJECT NO: 7361-00-70	HWY: CTH G	COUNTY: BUFFALO	CROSS SECTIONS: MAINLINE	SHEET	E

FILE NAME : S:\PROJECTS\W11602 WISDOT - CTH G BRIDGE, BUFFALO CO\DESIGN\CORRIDORS\73610000_CORRIDOR 30MPH VERT.DWG PLOT DATE : 7/29/2021 3:58:39 PM PLOT BY : HANOLD, ROBERT PLOT SCALE : 1" = 1' LAYOUT : 6

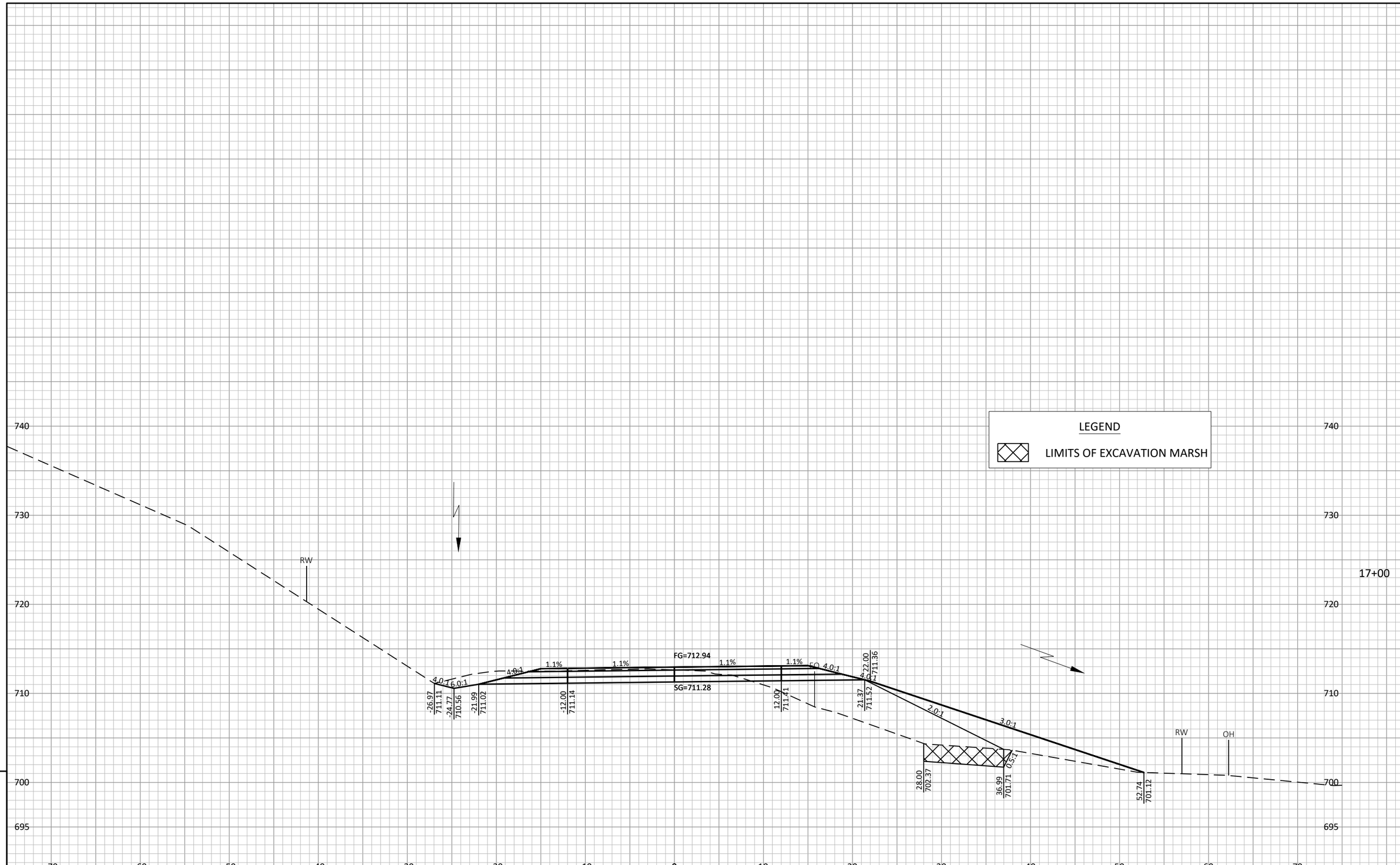

9

9

PROJECT NO: 7361-00-70	HWY: CTH G	COUNTY: BUFFALO	CROSS SECTIONS: MAINLINE	SHEET 63	E

FILE NAME : S:\PROJECTS\W11602 WISDOT - CTH G BRIDGE, BUFFALO CO\DESIGN\CORRIDORS\73610000_CORRIDOR 30MPH VERT.DWG PLOT DATE : 7/29/2021 3:58:41 PM PLOT BY : HANOLD, ROBERT PLOT SCALE : 1" = 1' LAYOUT : 7

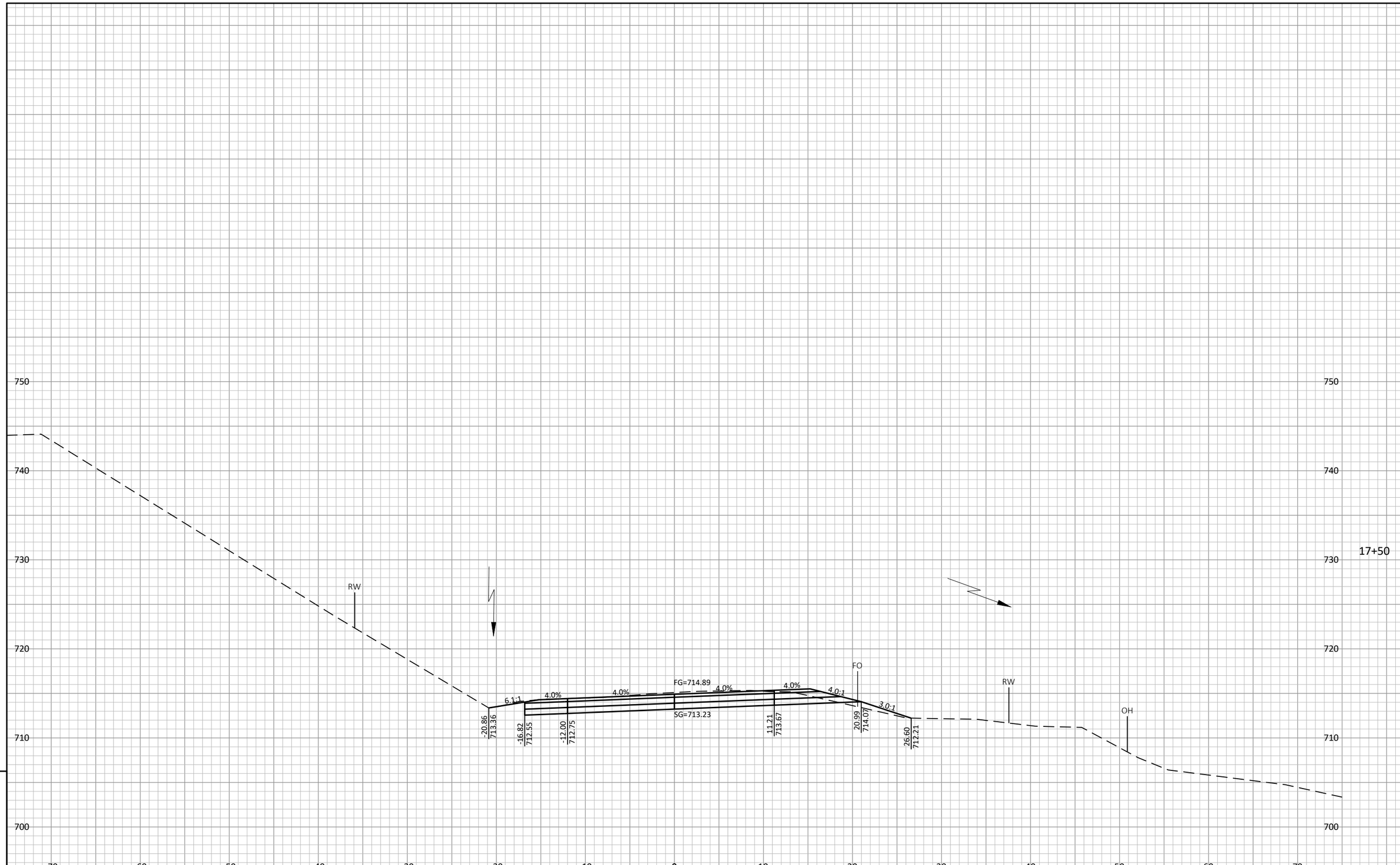

9

9

PROJECT NO: 7361-00-70	HWY: CTH G	COUNTY: BUFFALO	CROSS SECTIONS: MAINLINE	SHEET	E

FILE NAME : S:\PROJECTS\W11602 WISDOT - CTH G BRIDGE, BUFFALO CO\DESIGN\CORRIDORS\73610000_CORRIDOR 30MPH VERT.DWG PLOT DATE : 7/29/2021 3:58:42 PM PLOT BY : HANOLD, ROBERT PLOT SCALE : 1" = 1' LAYOUT : 8

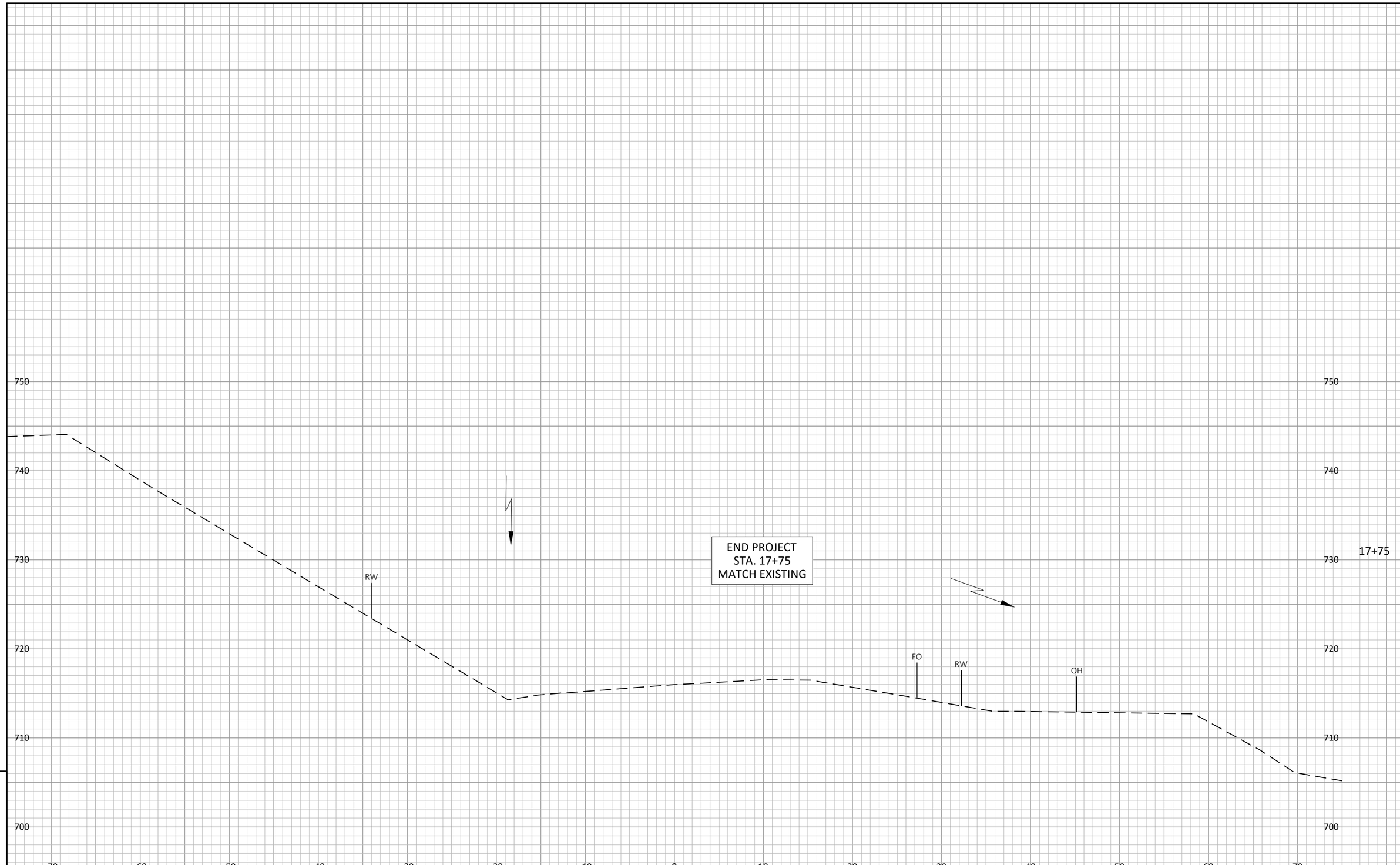

9

9

PROJECT NO: 7361-00-70	HWY: CTH G	COUNTY: BUFFALO	CROSS SECTIONS: MAINLINE	SHEET	E

FILE NAME : S:\PROJECTS\W11602 WISDOT - CTH G BRIDGE, BUFFALO CO\DESIGN\CORRIDORS\73610000_CORRIDOR 30MPH VERT.DWG PLOT DATE : 7/29/2021 3:58:44 PM PLOT BY : HANOLD, ROBERT PLOT SCALE : 1" = 1' LAYOUT : 9

LEGEND

LIMITS OF EXCAVATION MARSH

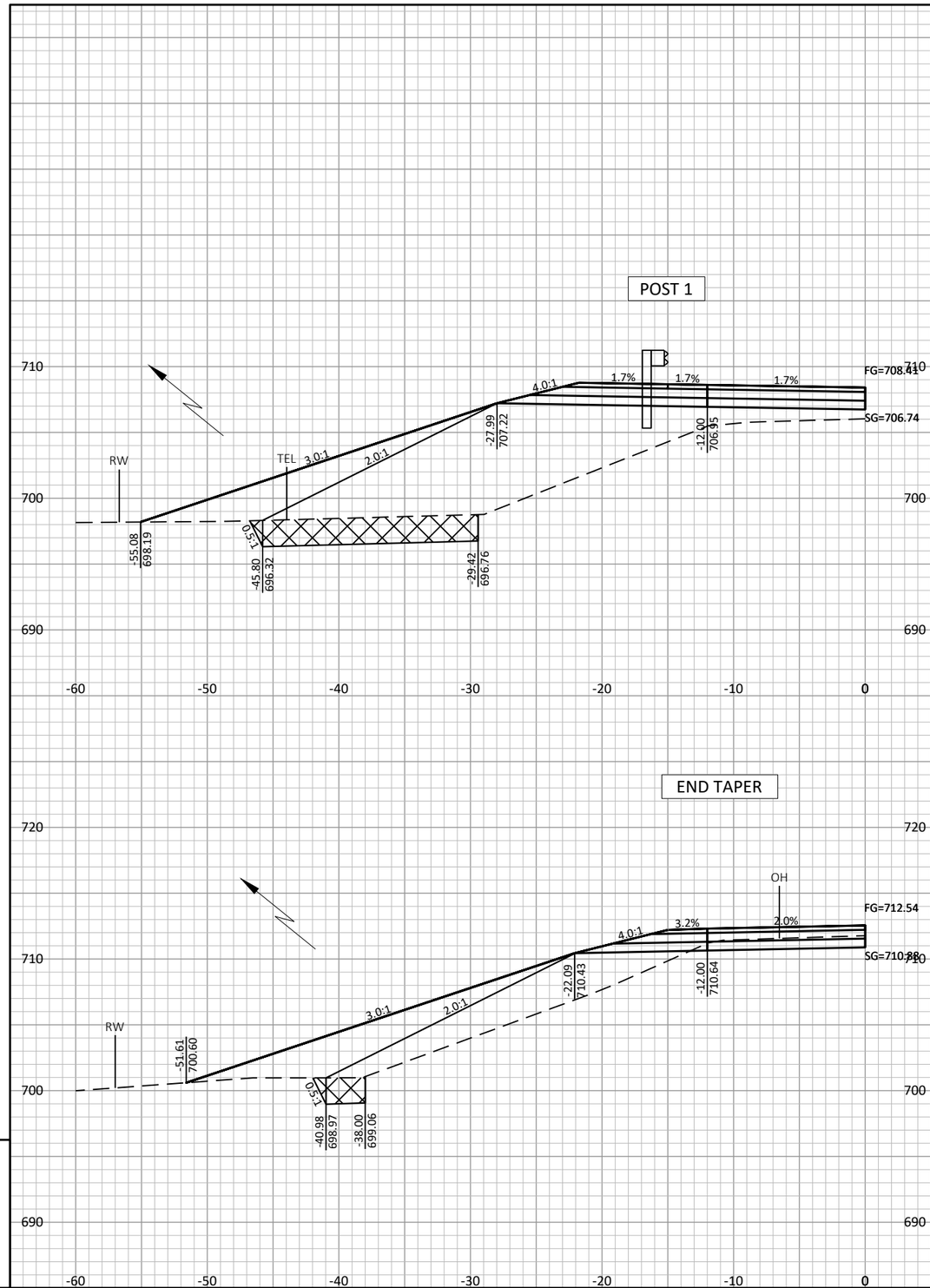

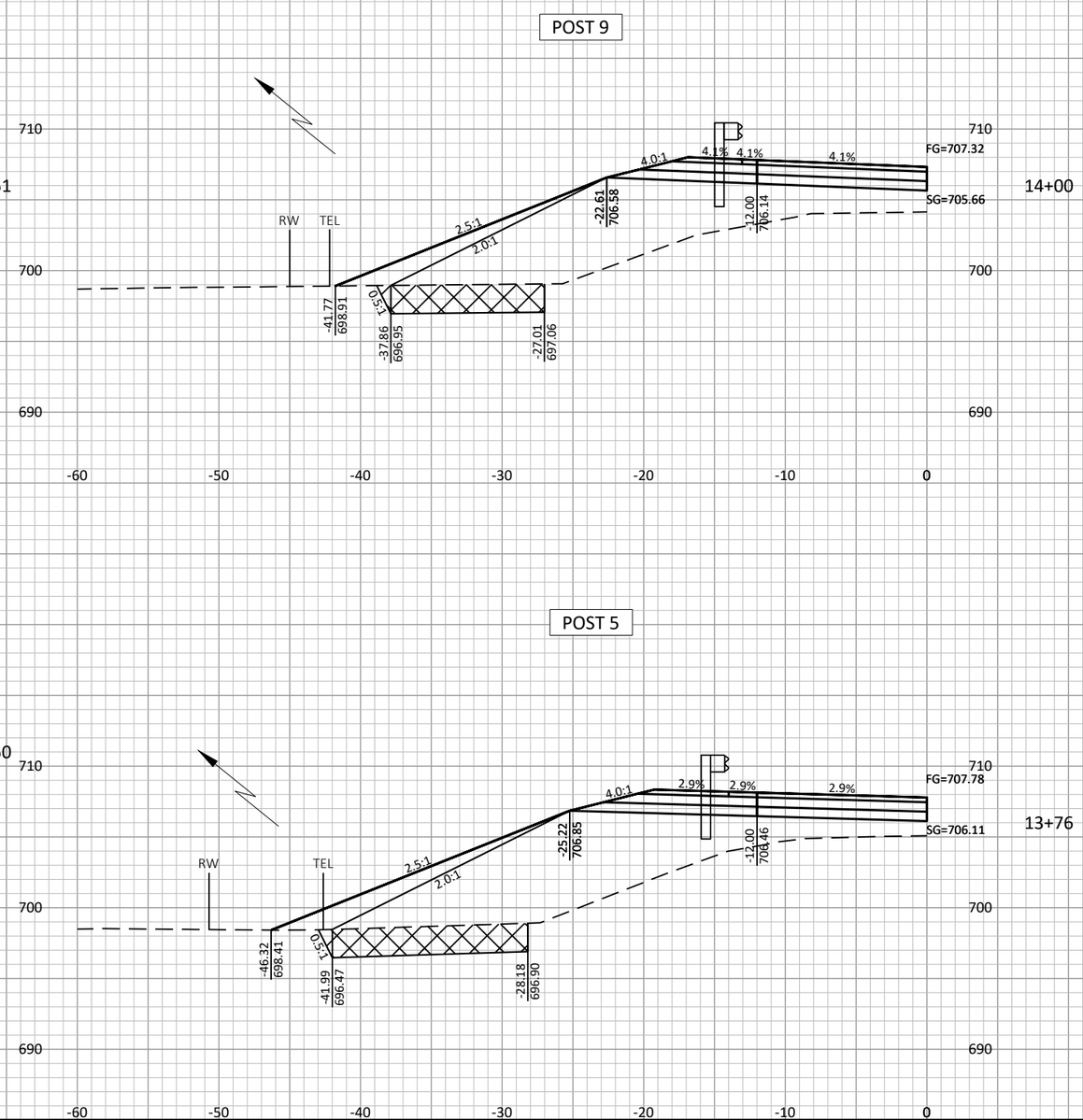

9

9

PROJECT NO: 7361-00-70	HWY: CTH G	COUNTY: BUFFALO	CROSS SECTIONS: MAINLINE (ENERGY ABSORBING TERMINAL SECTIONS)	SHEET 66	E

FILE NAME : S:\PROJECTS\W11602 WISDOT - CTH G BRIDGE, BUFFALO CO\DESIGN\CORRIDORS\73610000_CORRIDOR 30MPH VERT.DWG PLOT DATE : 7/29/2021 3:58:45 PM PLOT BY : HANOLD, ROBERT PLOT SCALE : 1" = 1' LAYOUT : SW EAT

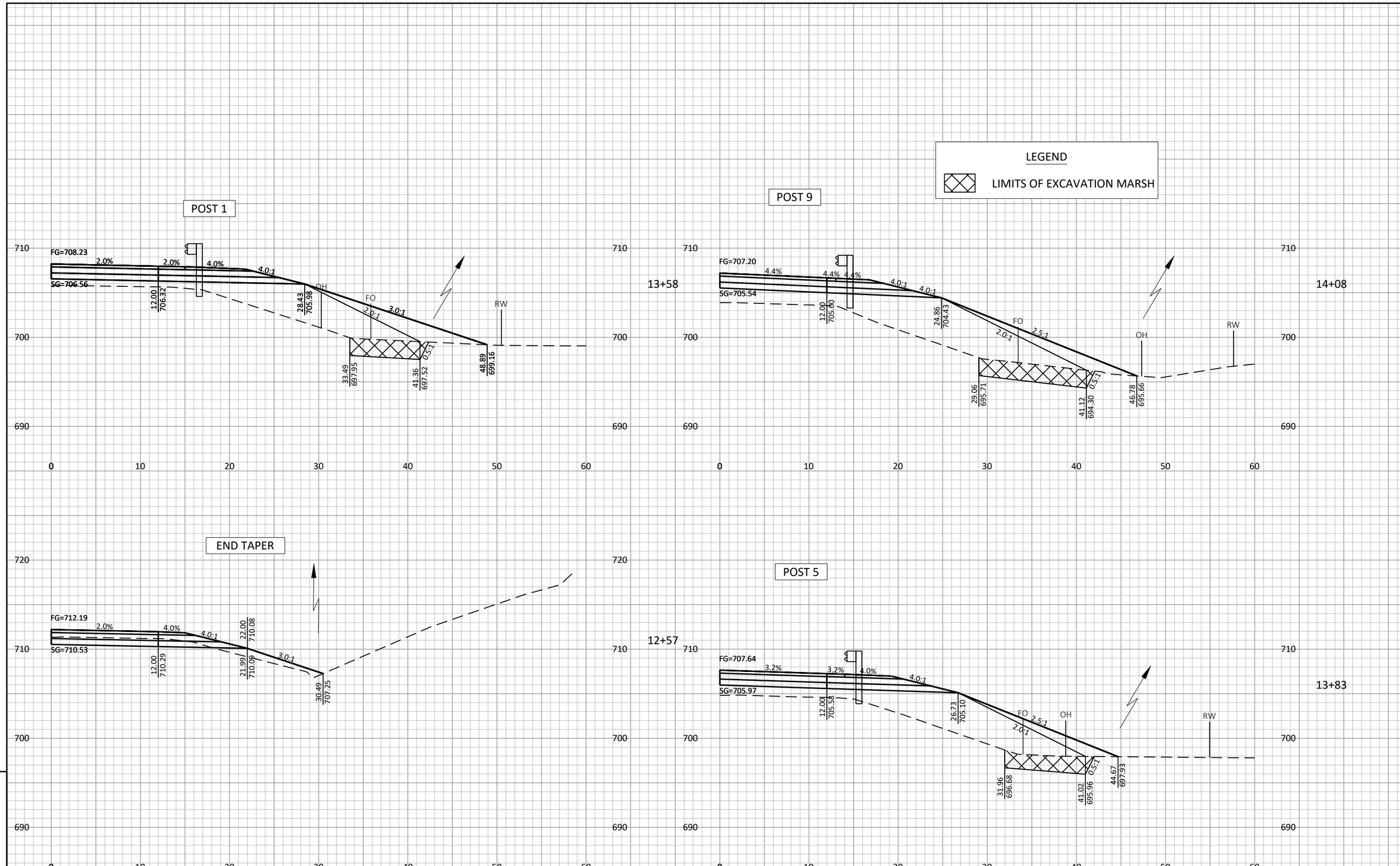

9

9

PROJECT NO: 7361-00-70	HWY: CTH G	COUNTY: BUFFALO	CROSS SECTIONS: MAINLINE (ENERGY ABSORBING TERMINAL SECTIONS)	SHEET 67	E

FILE NAME : S:\PROJECTS\W11602 WISDOT - CTH G BRIDGE, BUFFALO CO\DESIGN\CORRIDORS\73610000_CORRIDOR 30MPH VERT.DWG PLOT DATE : 7/29/2021 3:58:47 PM PLOT BY : HANOLD, ROBERT PLOT SCALE : 1" = 1' LAYOUT : SE EAT

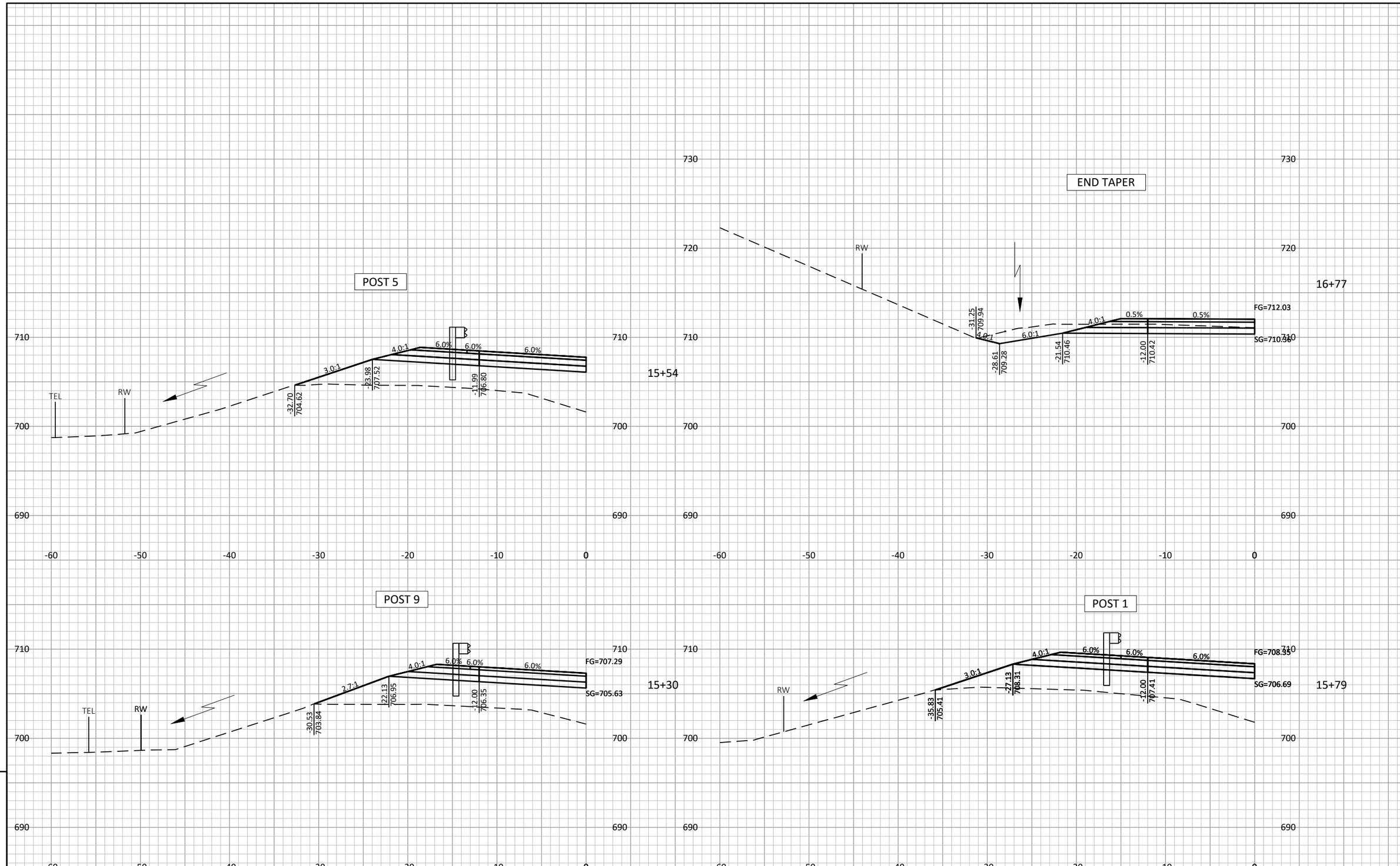

9

9

PROJECT NO: 7361-00-70	HWY: CTH G	COUNTY: BUFFALO	CROSS SECTIONS: MAINLINE (ENERGY ABSORBING TERMINAL SECTIONS)	SHEET 68	E

FILE NAME : S:\PROJECTS\W11602 WISDOT - CTH G BRIDGE, BUFFALO CO\DESIGN\CORRIDORS\73610000_CORRIDOR 30MPH VERT.DWG PLOT DATE : 7/29/2021 3:58:48 PM PLOT BY : HANOLD, ROBERT PLOT SCALE : 1" = 1' LAYOUT : NW EAT

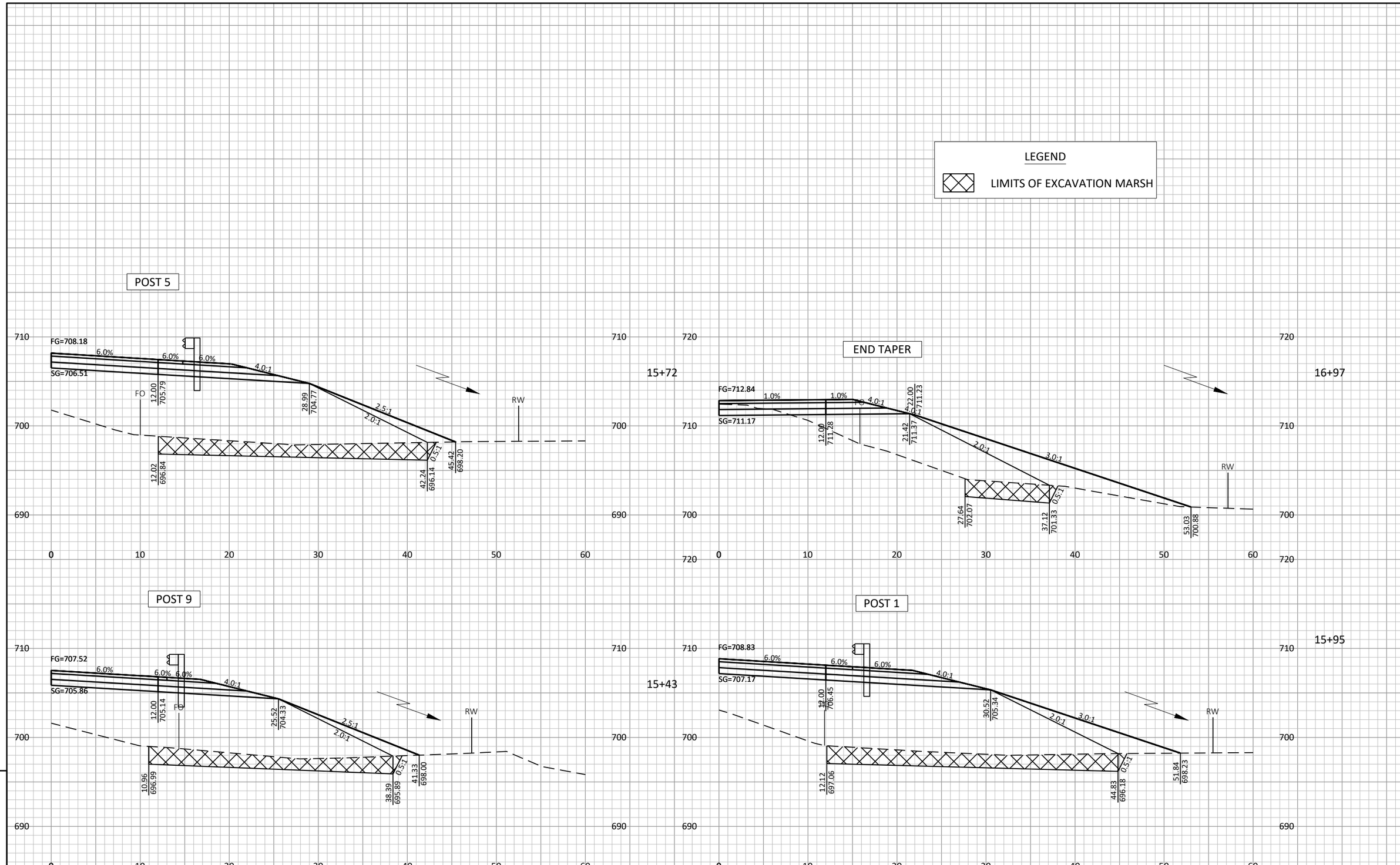

PROJECT NO: 7361-00-70	HWY: CTH G	COUNTY: BUFFALO	CROSS SECTIONS: MAINLINE (ENERGY ABSORBING TERMINAL SECTIONS)	SHEET 69	E

FILE NAME : S:\PROJECTS\W11602 WISDOT - CTH G BRIDGE, BUFFALO CO\DESIGN\CORRIDORS\73610000_CORRIDOR 30MPH VERT.DWG PLOT DATE : 7/29/2021 3:58:50 PM PLOT BY : HANOLD, ROBERT PLOT SCALE : 1" = 1' LAYOUT : NE EAT

9

9

Wisconsin Department of Transportation

Dedicated people creating transportation solutions through innovation and exceptional service.

http://www.dot.wisconsin.gov